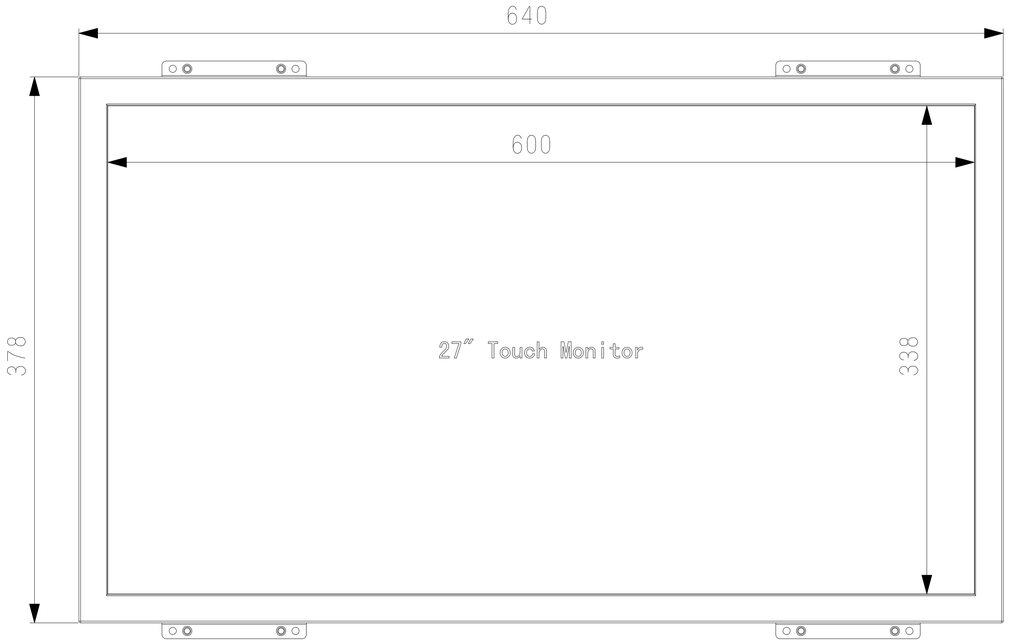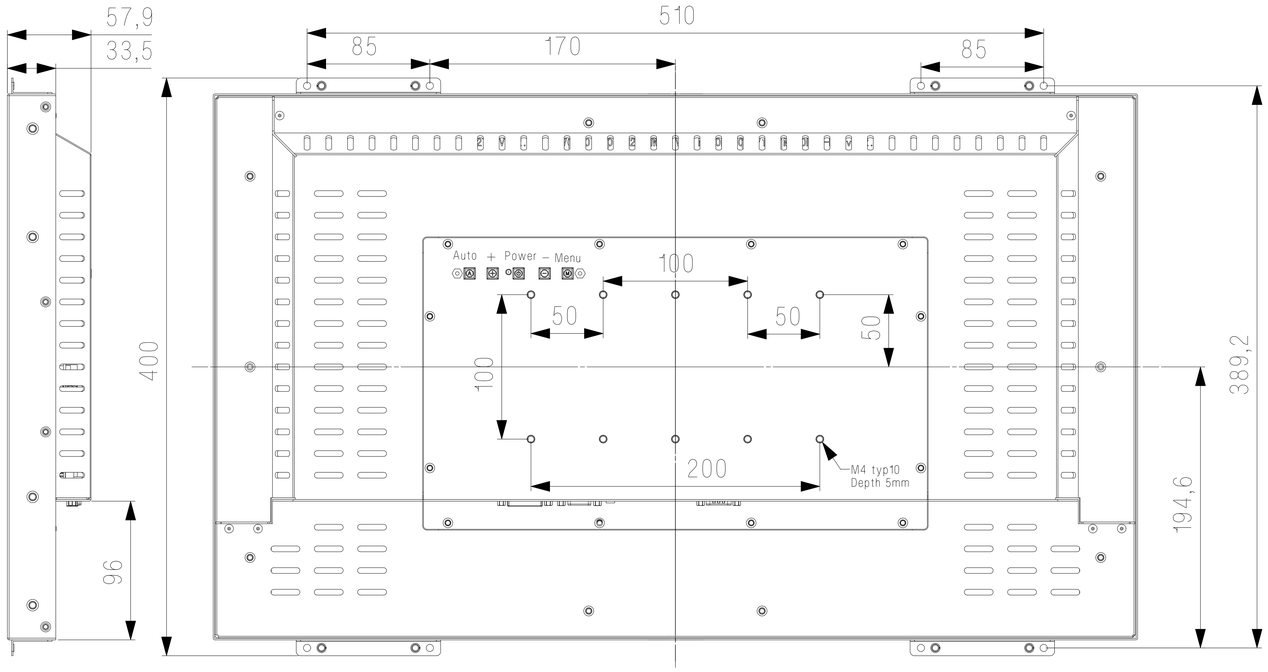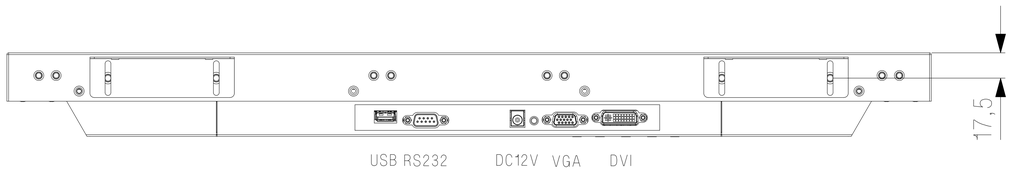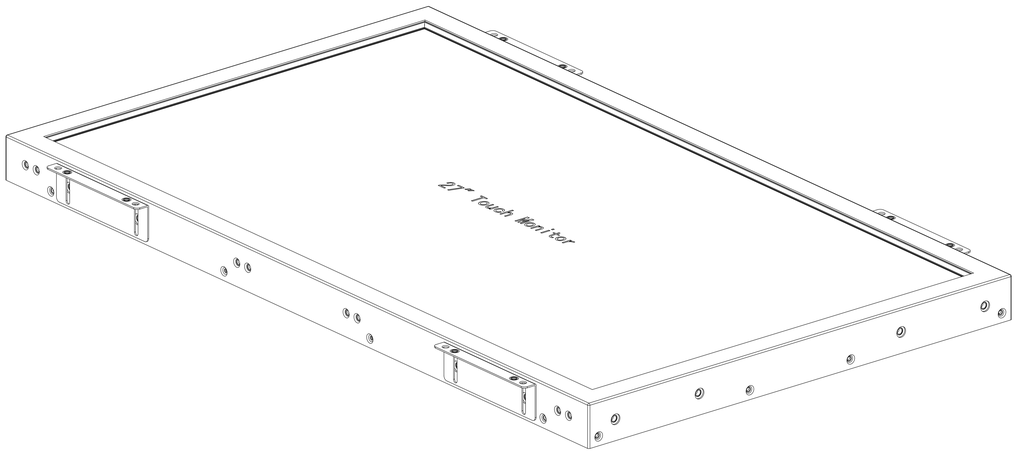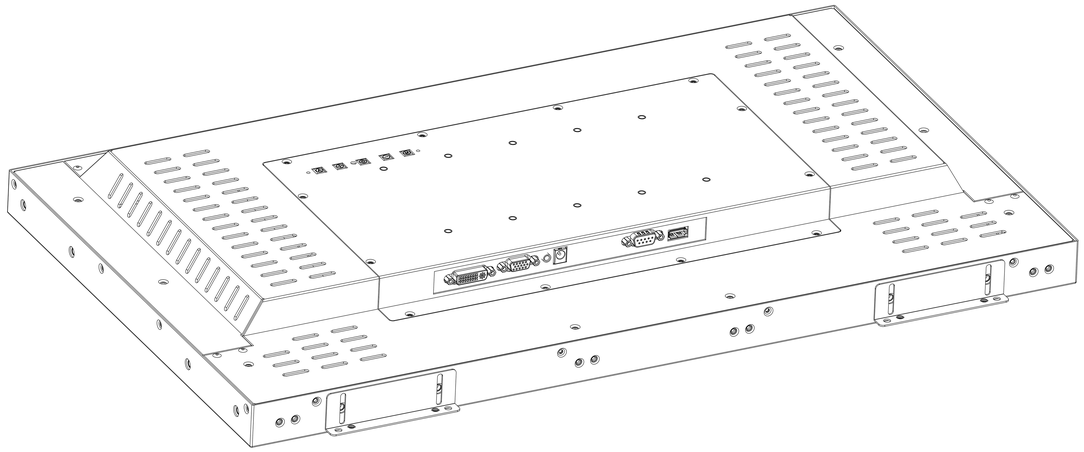22-Apr-2013 14:09:36-Create By Admin