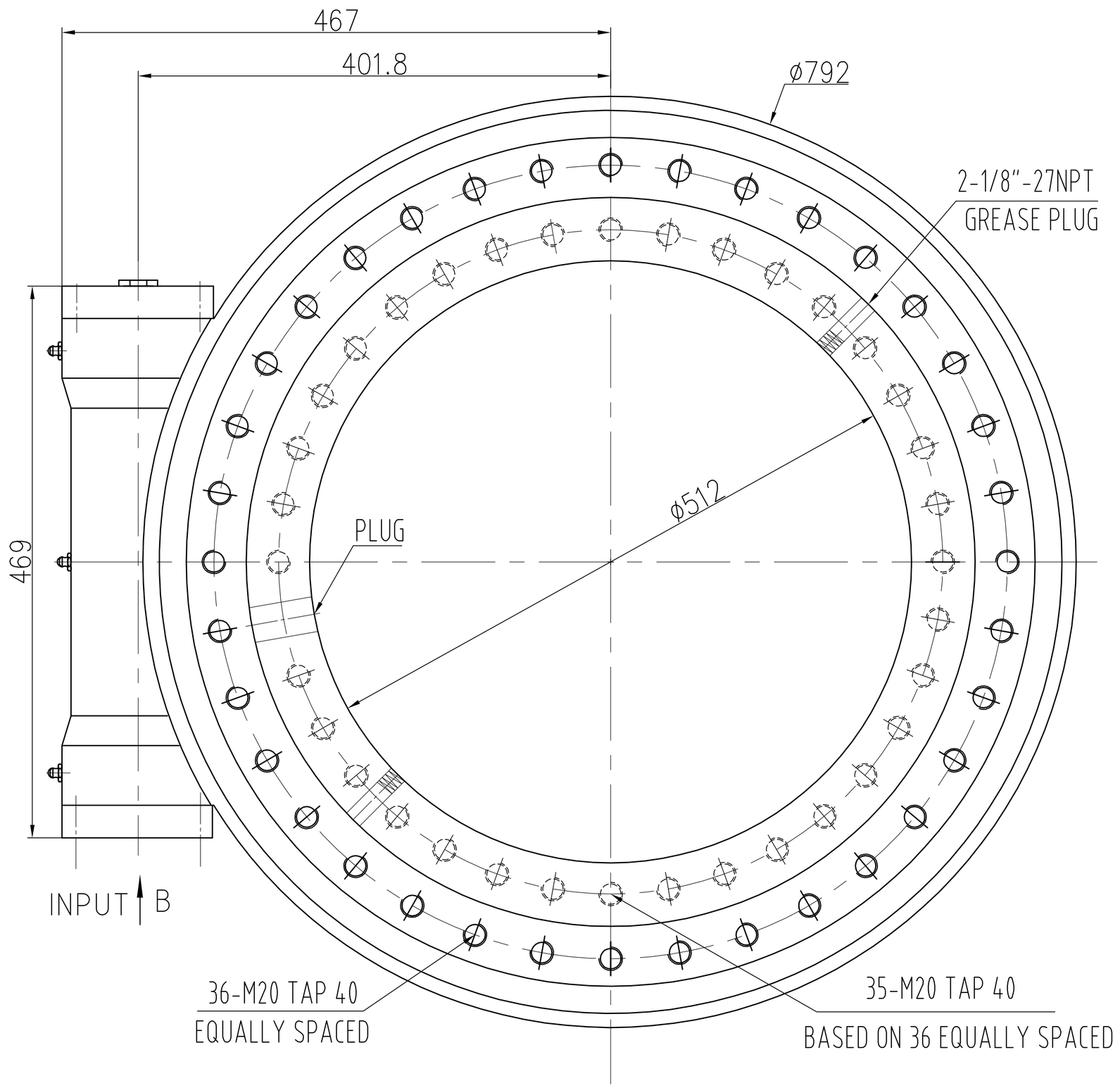

Slewing Drive Performance Data	
Gear Ratio	150:1
Rated Output Speed	≤1.5 rpm
Rated Output Torque	18 kN.m
Tilting Moment Torque	271 KN.m
Static Axial Rating	2360 kN
Static Radial Rating	945 kN
Dynamic Axial Rating	590 kN
Dynamic Radial Rating	470 kN
Tracking Precision	≤0.15°
Self Locking Gears	Yes
Weight	218 kg

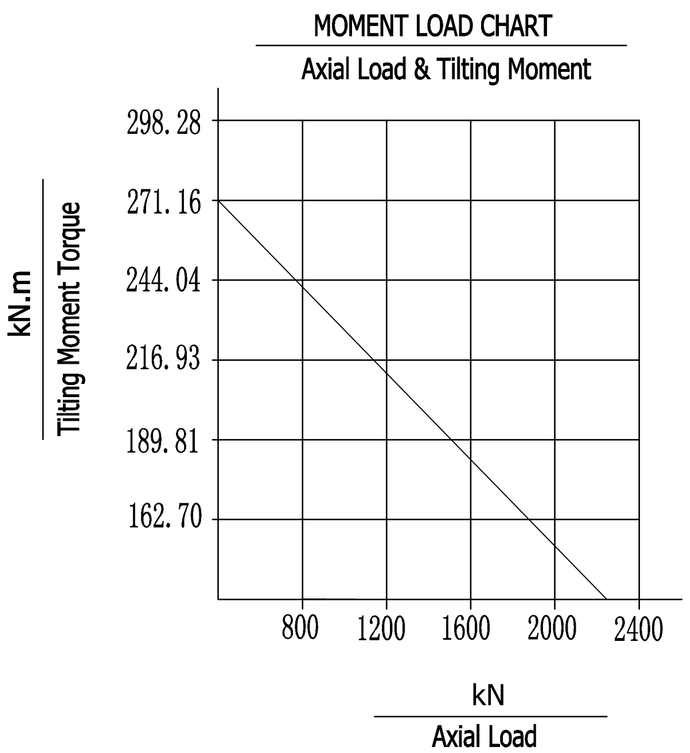

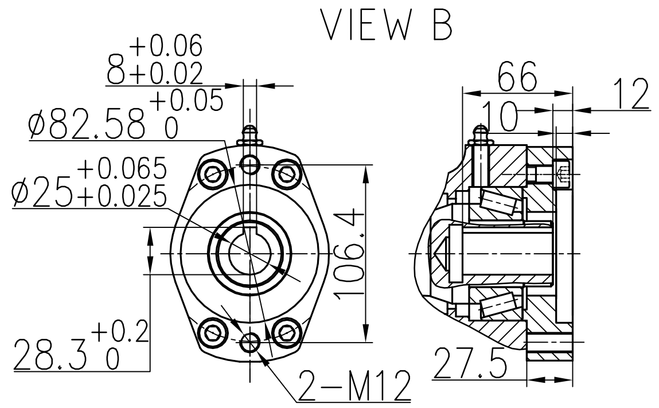

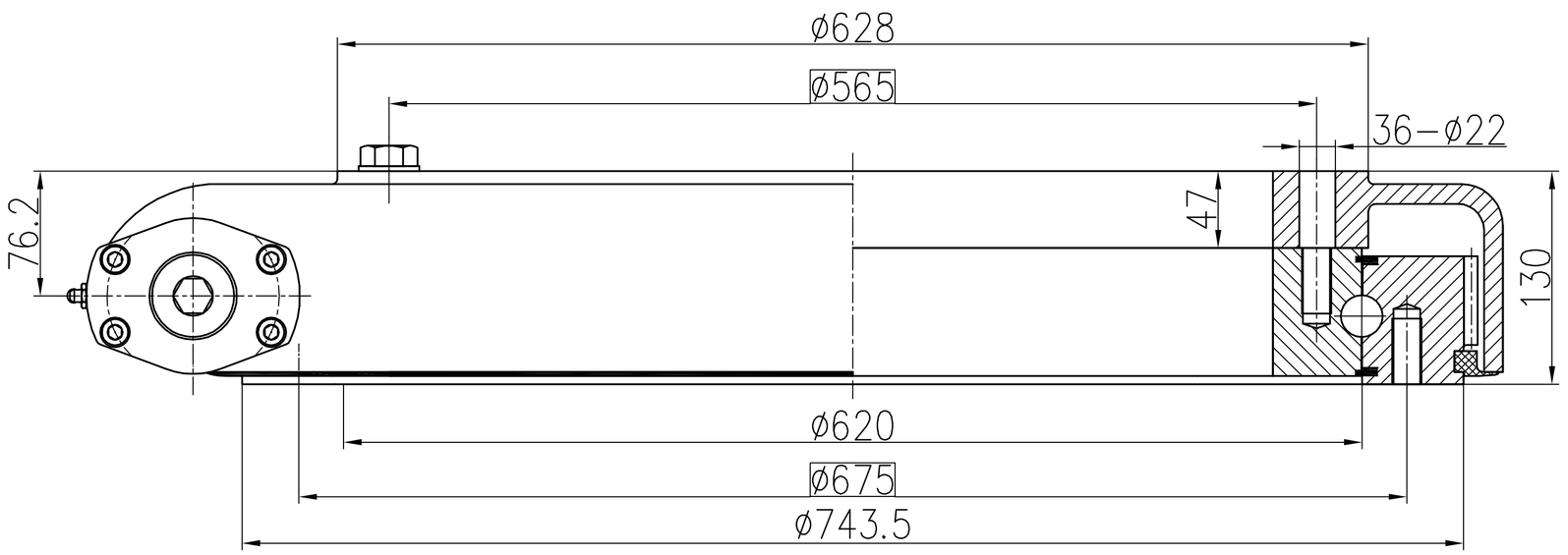

REV	DATE	REVISER	DESCRIPTION

DESIGNED BY

CHECKED BY

APPROVED BY

Xuzhou Wanda Slewing Bearing Co.,Ltd.
www.slew-bearing.com
Tel: +86-516-83309366 Fax: +86-516-83915766

ALL PROPRIETARY RIGHTS IN THE SUBJECT MATTER HERE OF ARE RESERVED, AND NO PERMISSION IS GRANTED OR TO DISCLOSE REPRODUCE THIS PRINT IN WHOLE OR IN PART, ANY OF THE INFORMATION TO OTHERS.

WEIGHT	SCALE	SLEWING DRIVE

SIZE	A3	SHEET	1/1	SE25-150-H-25R	REV
					A

SYMBOLE ISO