90 Series Auto-Reset Thermal Circuit Portectors

Engineering information:

Rating:	1.0A-10.0A
Input Power:	125/250 Vac, 50Vdc
Interrupting Capacity:	1,000A-125Vac 200A-250Vac 200A-50Vdc
Dielectric Strength:	1,500vac,1minute
Reset Time:	Within 30sec (at 25℃)
Voltage Drop:	Less than0.25v
Insuiation Resistance:	>500Mohms
Resettable Overload Capacity:	6 times rated current
Temperature Rise at Terminal Black:	Less than 65℃ at 100% of rated current applied continuously at 25 ℃
Contact Endurance:	125VacX150% of rated current >500 cycles

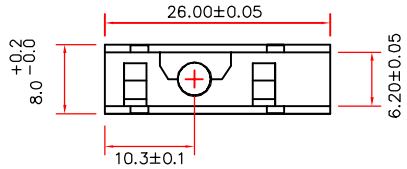

Calibration(at 25℃/77 F)

100% of rated current:	Hold,No Trip
150% of rated current:	Mebay trip or not
175% of rated current:	<1.0min
200% of rated current:	1.0-10.0 sec
300% of rated current:	0.4-3.0 sec

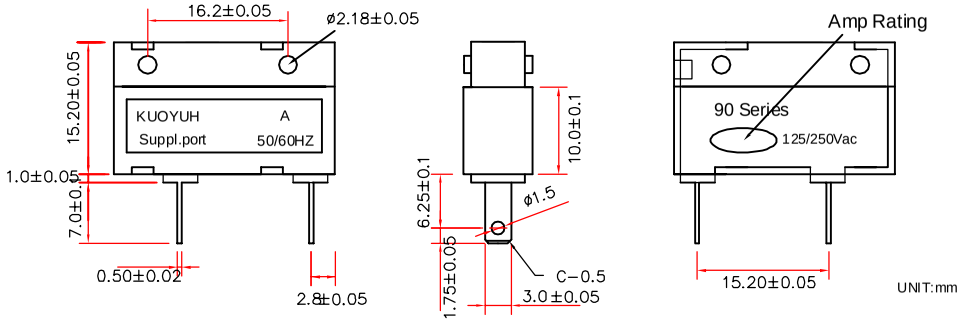

90 Series Trip Time Curves

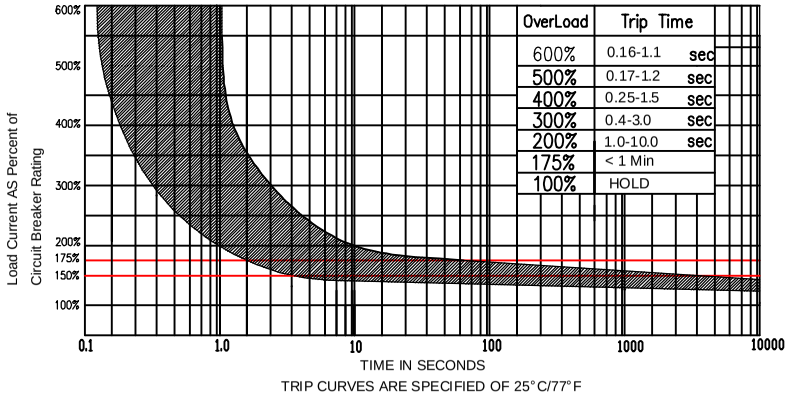

OverLoad	Trip Time
600%	0.16-1.1 sec
500%	0.17-1.2 sec
400%	0.25-1.5 sec
300%	0.4-3.0 sec
200%	1.0-10.0 sec
175%	< 1 Min
100%	HOLD

Max.Internal Resistance

1.0-2.0Amp	0.175 Ohm
2.1-3.0Amp	0.125 Ohm
3.1-3.7Amp	0.050 Ohm
3.8-5.0Amp	0.040 Ohm
5.1-7.0Amp	0.030 Ohm
7.1-10.0Amp	0.020 Ohm

Ambient Temperature Correction Factor

The time/current characteristic curve depends on the ambient temperature prevailing. In order to eliminate nuisance tripping. Please multiply the current breaker current ratings by the derating factor shown below.

Ambient temperature	-10°C	0°C	10°C	25°C	40°C	50°C	60°C
Multiplication factor	1.30	1.20	1.10	1.00	0.85	0.73	0.60

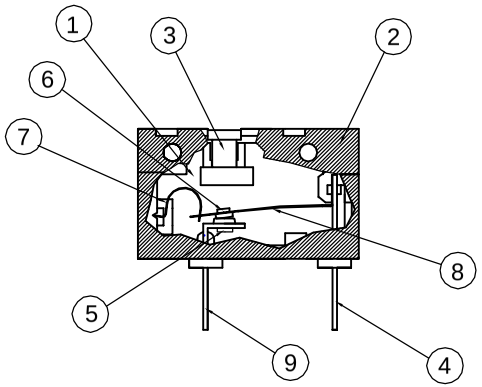

	Name	Material
1	Basic	PBT 94-V0
2	Enclosure	PBT 94-V0
3	Push Rod	PBT 94-V0 or PC
4	#1 Terminal	Copper alloy C2680 0.5t
5	#1 Contact	AgNi AgCdO(Free)
6	#2 Contact	AgNi AgCdO(Free)
7	#2 Spring Sheet	Copper alloy C5210 0.08t
8	Elastic Sheet	Bimetal (EMS or Sumitomo)
9	#2 Terminal	Copper alloy C2680 0.5t
	Item no	90 Series

NO	DESCRIPTION	APPROVED	DATE
4			
3			
2			
1			

TOLERANCE	
DIMENSION	TOLERANCE
XX.XX	±0.05
XX.X	±0.1
XX	±0.15
ANGLE	TOLERANCE
X	±1°
X.X	±0.5°

APPROVED	CHECK	DESING	DRAWER	UNIT	mm
Hunter.H	Mark.C	John.L	Cewen.O	SCALE	1:1
FILE NO	90 Series Auto-Reset Thermal Circuit Portectors			MATERIAL	Engineering information:
REV	A/0	DATE	Jun.20.06'	TITLE	90 Series Thermal Circuit Protectors
KUOYUH W.L. Enterprise Co.,Ltd.				DRAWING NO	950720-A00

PDF created with pdfFactory trial version www.pdffactory.com