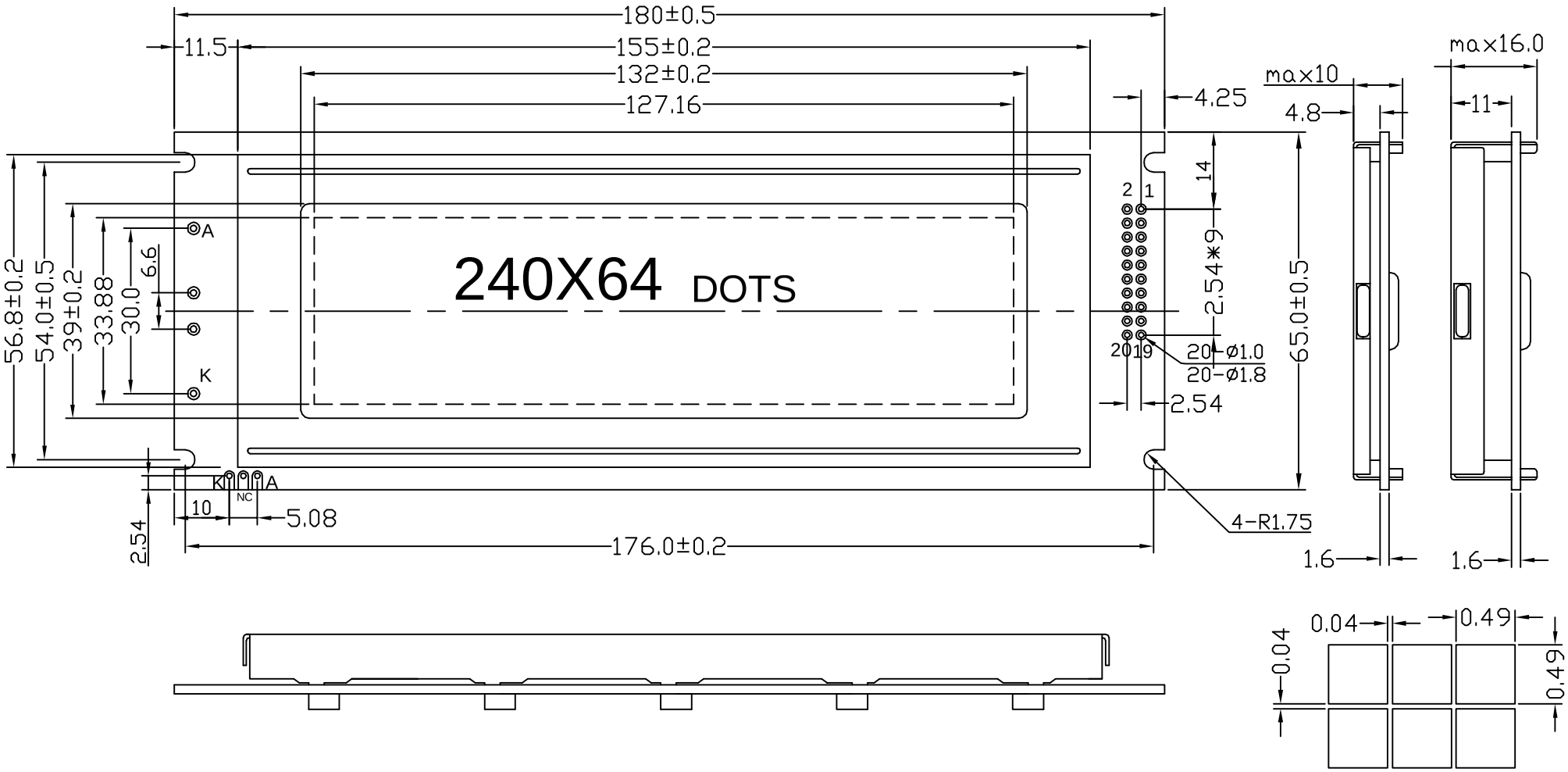

UNIT: mm

PERFORMANCE FEATURES

LC FLUID	☐STN ☐HTN ☐TN
POLARIZER	☐TRANSFLECTIVE ☐REFLECTIVE ☐TRANSMISSIVE
COLOR	☐YELLOW ☐BLUE ☐GRAY
BACKLIGHT	☐LED ☐SIDE ☐EL
VIEWING ANGLE	☐6:00 ☐12:00
TEMPERATURE RANGE	☐STANDARD ☐WIDE

PIN	SIGNAL	PIN	SIGNAL	PIN	SIGNAL
1	FGND	9	VEE	17	DB6
2	VSS	10	RES	18	DB7
3	VDD	11	DB0	19	FS
4	V0	12	DB1	20	NC
5	WR	13	DB2		
6	RD	14	DB3		
7	CE	15	DB4		
8	C/D	16	DB5		

XIAMEN OCULAR OPTICS CO.,LTD

REVISION RECORD

VER	Date	Modify Contents	Name	Confirm
2				
3				
4				
5				
6				

Drawn: alan

Model Name: GDM24064A7

Checker:

Date: 2012-12-26

Approved:

Page: 1-1