2M319 SERIES

1. ELECTRICAL CHARCTERISTICS

Peak anode voltage (ebm)	4.4±0.15kV
Average anode current (Ib)	320mAdc
Average output power (Po)	1050±40W
Frequency (fo)	2458±10MHz
Filament voltage(Ef)	3.3V
Weight	810g
Typical oven power by IEC method	900~1100W

2. VARIATION OF MOUNTING YOKE FOR FITTING INTO MICROWAVE OVEN

920 930 940

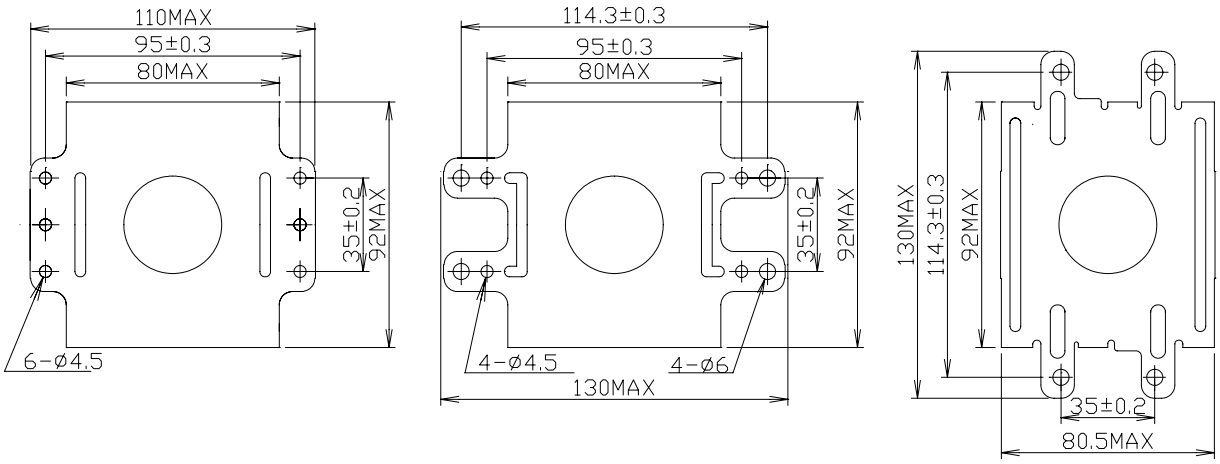

3. OPTIONS(Mounting plate and direction of filament terminal)

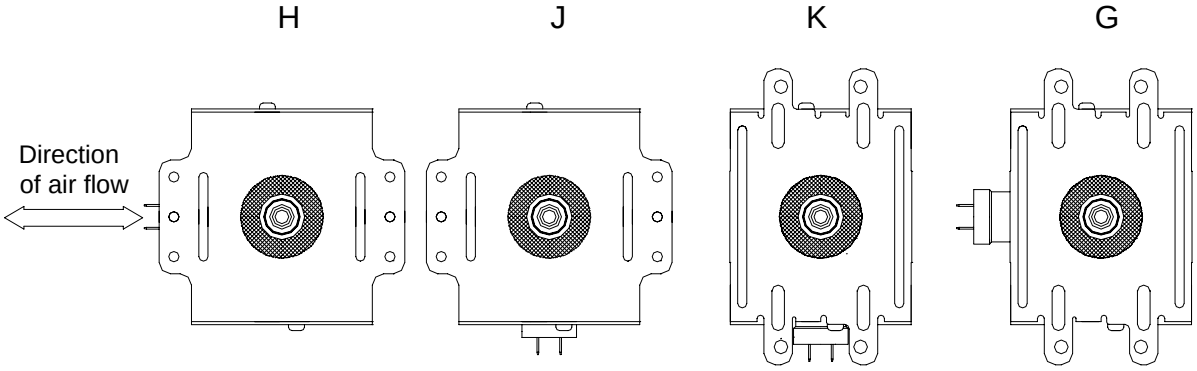

2M319 SERIES

DIMENSIONAL OUTLINE

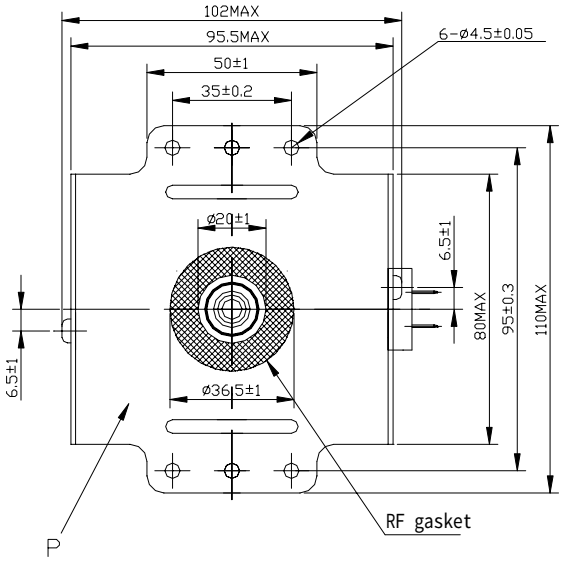

Unit : mm

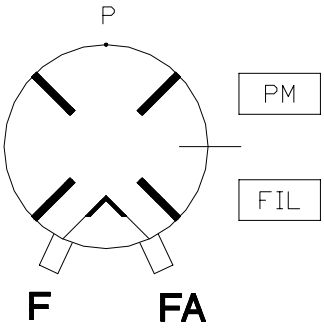
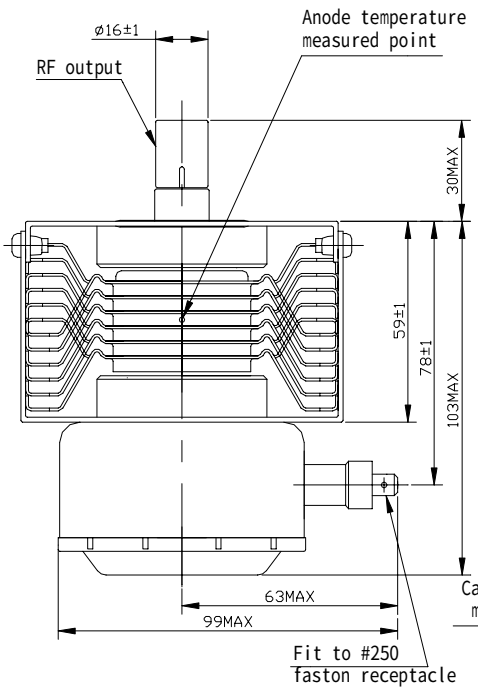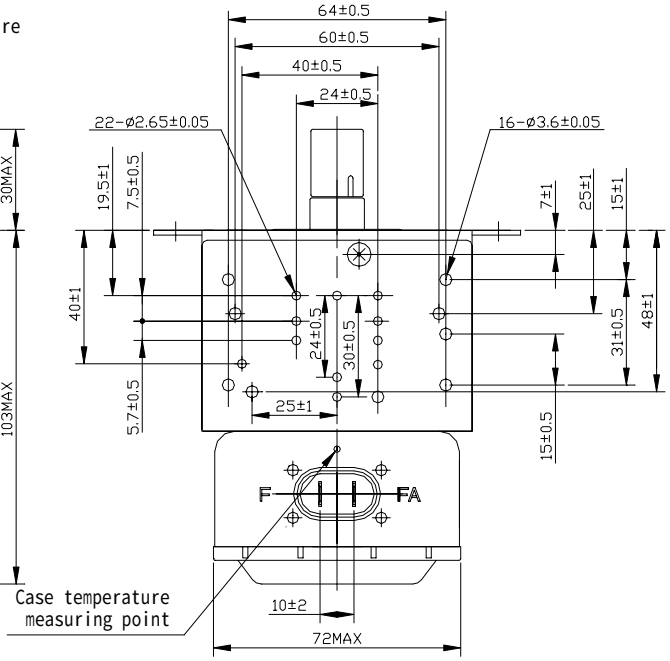
Note(1):Temperature to be measured at the outlet side of airflow.