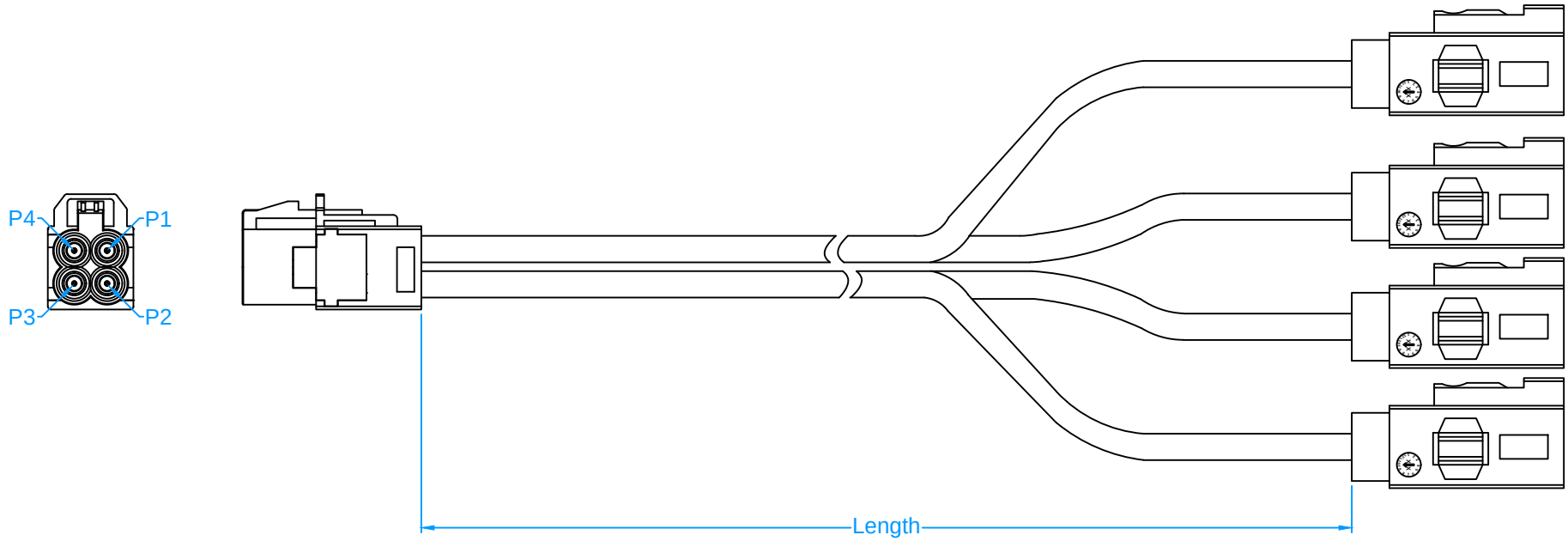

Part Number	Length (IN)	Length (MM)
KM-024112-006I	6±3%	152.4±3%
KM-024112-0500	19.685±3%	500±3%
KM-024112-001F	12±3%	304.8±3%

- Additional lengths can be provided by replacing XXXX to desired length in MM, or XXXI in INCH, or XXXF in FEET.
- Any queries feel free to consult our sales team at SALES@DGKEMY.COM

No.	Specification	QTY	Description
3	Fakra (F) Jack, code Z	4	KM-011403-Z
2	Mini Fakra (F) Jack, code Z, Quad Port, Rosen-type	1	KM-013701-Z
1	Coaxial Cable	1	302LL

RoHS Compliant

THIRD ANGLE PROJECTION

* MAJOR DIMENSION

UNLESS OTHERWISE NOTED TOLERANCES

SCALE 1:1 UNIT MM

APPROVED JOHN

CHECKED TERRY

DRAWN KEVIN

DRAWN DATE 21 Mar. 2011

KM KeMy Electronic Technology Inc.

TITLE
Mini Fakra (F) Jack, code Z, Quad Port, Rosen-type - 302LL - 4* Fakra (F) Jack, code Z, Various Lengths

DRAWING NO. KM-024112-XXXX

REV A

All rights reserved. www.dgkemy.com