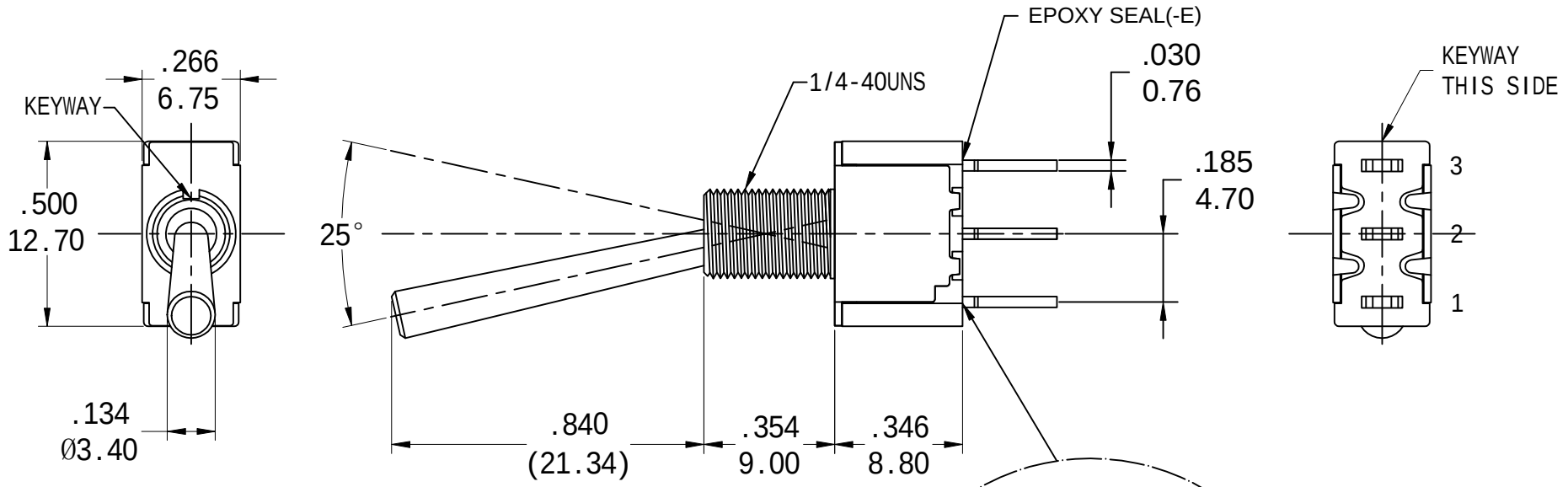

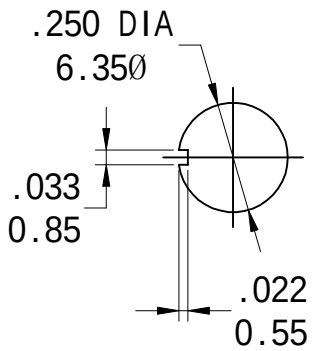

PANEL MOUNTING
1/4 IN. BUSHING

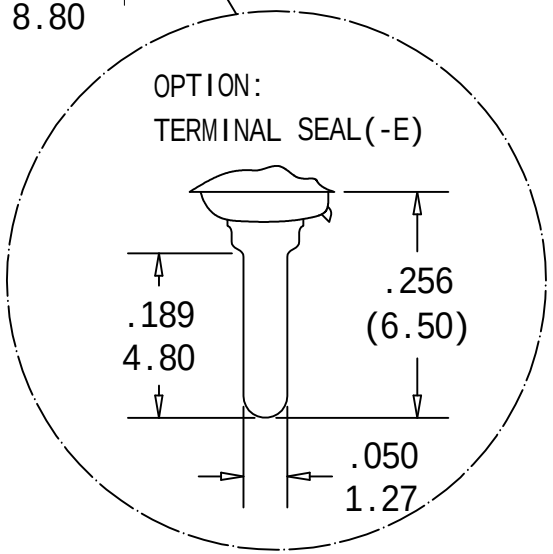

Q:silver plated
R:gold plated
G:gold over silver

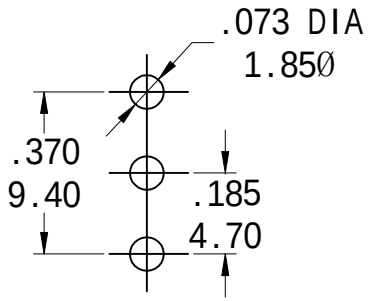

P.C MOUNTING DIMENSIONS

Model No.	Switching Position		
T8013	ON	NONE	ON
T8013A	ON	NONE	(ON)
T8014	ON	OFF	ON
T8014A	(ON)	OFF	(ON)
T8014B	ON	OFF	(ON)
Term. Comm.	2-3	OPEN	2-1

Schematic

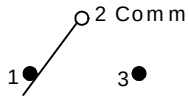

NO.	Edition	Modified Contents	Name	Date
1	A0	NEW	陈代学	22.05.27

Nominal Tolerance	
Range	Tolerance
0 ~ 1	±0.10
1 ~ 4	±0.20
4 ~ 16	±0.30

Part no. T8013-WEC

Dwg no.

Part Name.

T80-T/ SPDT Miniature Toggle Switches

WIN-KARE Technology Co.,Ltd

Scale 1:1

Unit m/m (inch)

Rev. 0

Check	
Drawer	
Date	2022.05.27
Edition	A0