RS-390/395H

输出功率：约1.0～25W
碳刷马达

OUTPUT: APPROX 1.0～25W
Carbon Brush Motor

典型应用:
传真机
复印机
遥控模型

Typical Applications:
Fax Machines
Copy Machines
Radio Control Model

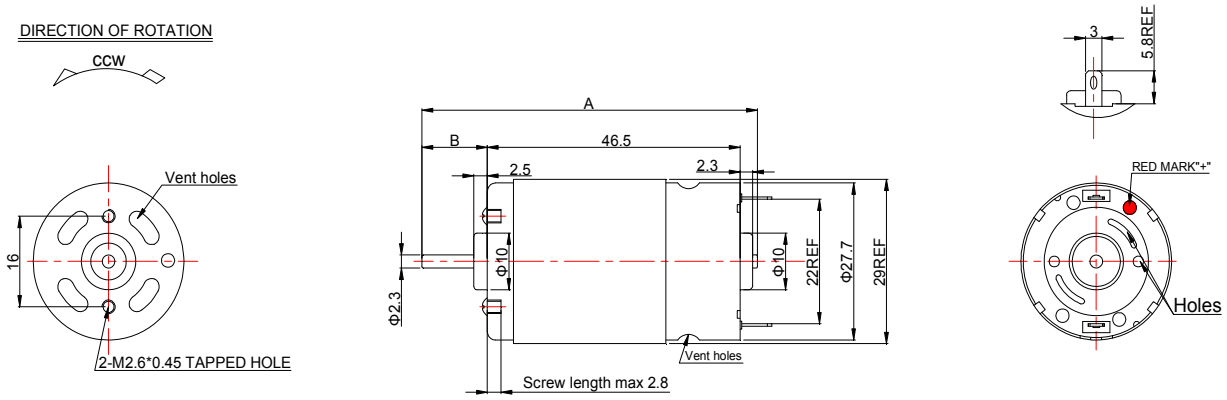

Unit:mm

Customizable Parameters:
1. Length A and B
2. Electrical Performance
3. Direction of Rotation

WEIGHT:92g(APPROX)

型号 MODEL	电压 VOLTAGE		无负荷 NO LOAD		最大效率点 AT MAXIMUM EFFICIENCY					堵转 STALL		
	使用范围 OPERATING RANGE	额定值 NOMINAL	转速 SPEED	电流 CURRENT	转速 SPEED	电流 CURRENT	转矩 TORQUE		功率 OUPUT	转矩 TORQUE		电流 CURRENT
		V	rpm	A	rpm	A	g.cm	mN.m	W	g.cm	mN.m	A
RS-390SH-21130	6.0~15.0	12.0	7200	0.12	6047	0.63	79.8	7.83	4.95	498	48.87	3.30
RS-395PH-10220	12.0~26.0	24.0	3900	0.04	3078	0.15	60.3	5.92	1.90	286	28.07	0.56
RS-395SH-18100R	12.0~26.0	24.0	9900	0.09	8465	0.52	114.5	11.24	9.94	775	76.05	3.00

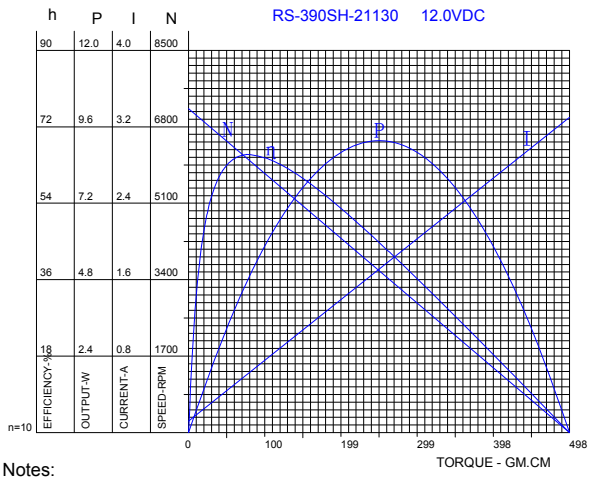

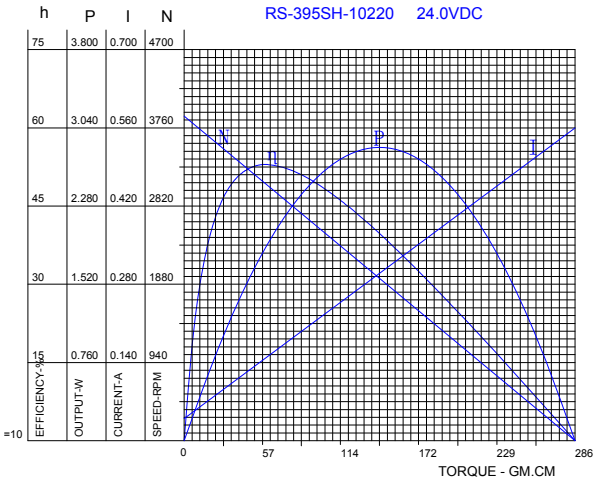

Notes:
The above technical data sheet only for reference, the parameters like voltage, speed, current, torque, etc. are avaible to be custom made per your request.