		DESIGN:(设计)	CHECKED:(检查)	APPROVED:(批准)	SPECIFICATION 规 格			
		HOU			CUSTOMER'S CODE:(客户型号)		EDITION:(版本号)	
Date:(日期)	2025.03.12	Page:(页数)	1/1	图纸视角:			EDITION:(版本号)	01

RoHS

正视图 侧视图 背视图

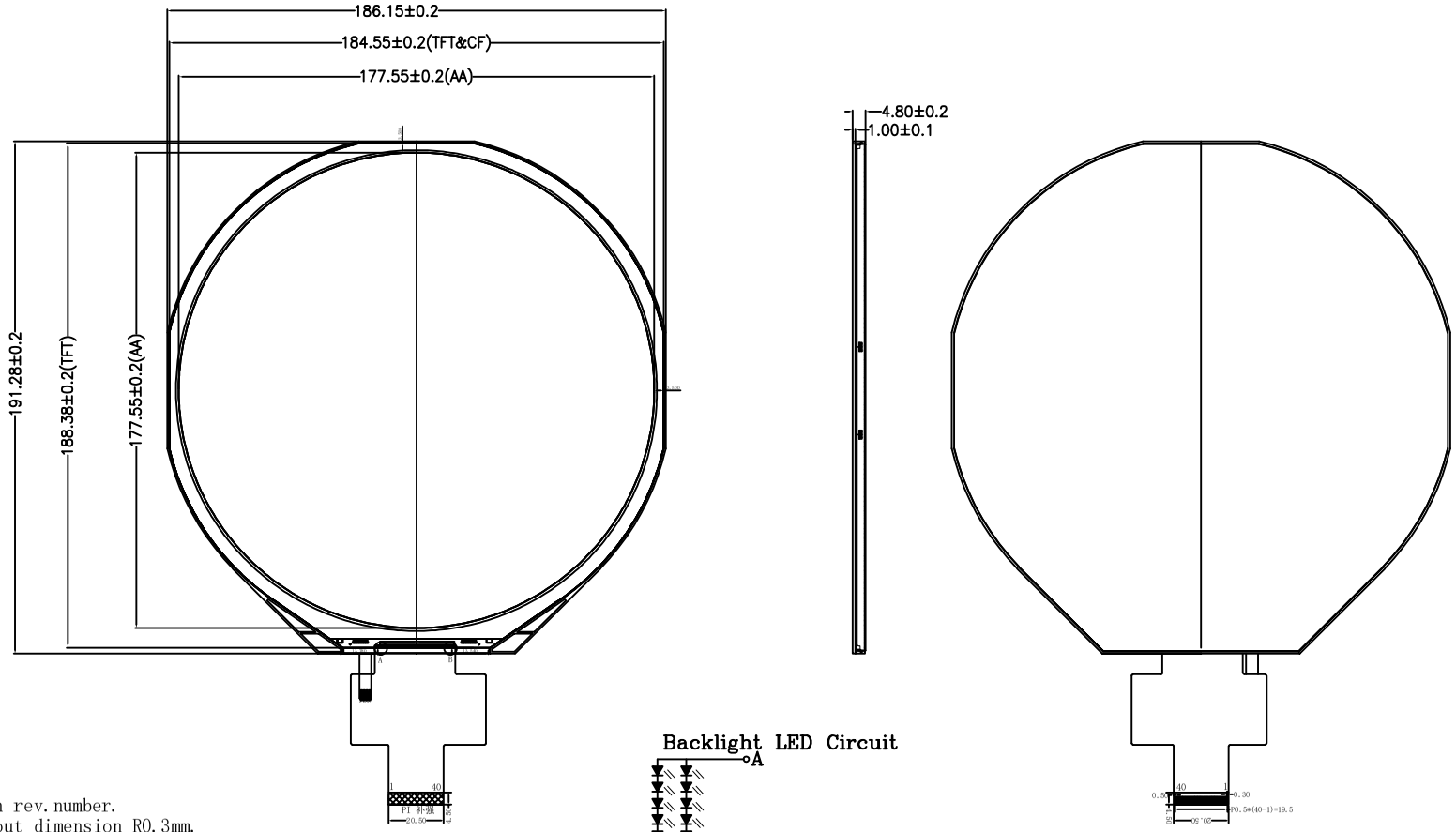

1	LEDA
2	LEDA
3	LEDK
4	LEDK
5	VDD
6	VDD
7	GND
8	RESET
9	STBYB
10	GND
11	D0N
12	D0P
13	GND
14	D1N
15	D1P
16	GND
17	CLKN
18	CLKP
19	GND
20	D2N
21	D2P
22	GND
23	D3N
24	D3P
25	GND
26	CSB
27	SCL
28	SDAI
29	SDAO
30	VDD_OTP
31	GND
32	NC
33	NC
34	NC
35	NC
36	NC
37	GND
38	GND
39	GND
40	GND

LVDS 接口

Backlight LED Circuit

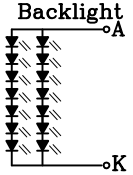

VF=21V If=160mA

1. Unit:mm.
2. ⚠ Modification rev. number.
3. All radii without dimension R0.3mm.
4. All draft angles to be 1.5°
5. Unspecified Tolerances is :±0.20mm.
6. LCD Driver IC:FL5893
7. LCD Driver Voltage :2.8±0.3V
8. Color :White
9. Operating Temperature : -20° -- +70° C
10. Storage Temperature : -30° -- +80° C

华芯科技有限公司
HUAXIN TECHNOLOGY CO.,LTD

Rohs Compliant	SCALE:1/1	UNIT:mm	PAGE:1/1		REV:1.0
TITLE:	TFT		APPROVE	CHECK	DISINER
PART NO.	HX070THD8970ANT		Date	2025/05/06	

Customer Name: 客户名称		Approval Date: 承认日期		Approved By: 承认		Please Confirm This Drawing On/Before 请 签 回 此 图	