ABIDE BY ROHS

Blue shaft

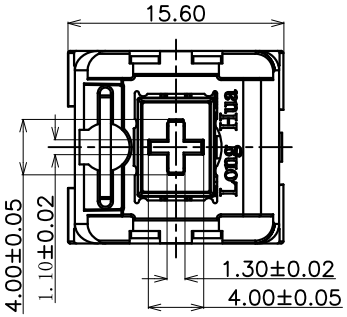

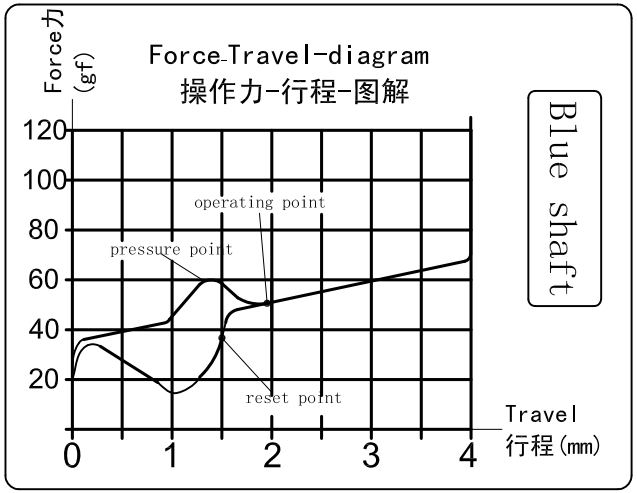

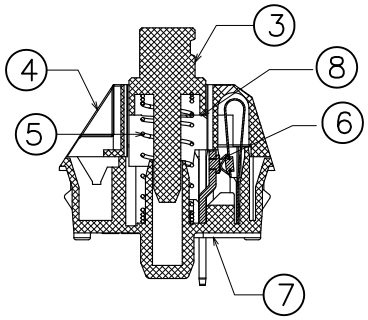

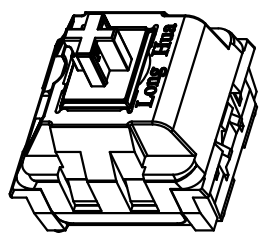

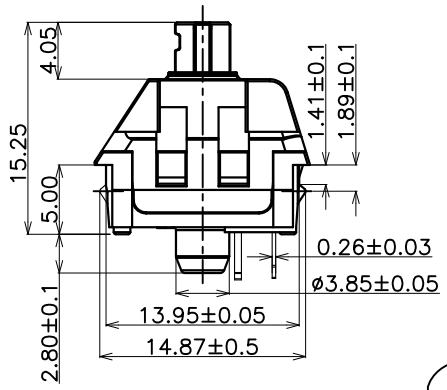

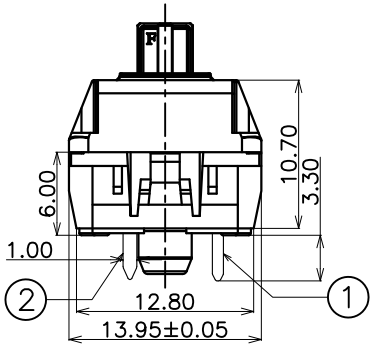

■ SWITCH FUNCTION

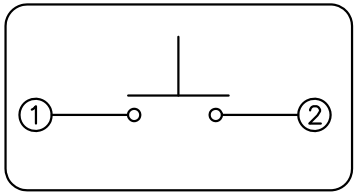

■ Specification :

- 1. Rating :12V AC/DC max. 2V DC min. 10mA AC/DC max. 10μA DC min.
- 2. Contact Resistance : 100mΩ Max
- 3. Insulation Resistance :100MΩ Min (DC500V)
- 4. Withstand Voltage :AC100V(50-60Hz) for 1 minute
- 5. Bounce Time:≤5msec (at 16 in/sec. actuation speed)
- 6. Operation Force :50±10gf
- 7. Pre travel:1.90mm±0.4mm
- 8. Tactile Force :60±10gf
- 9. Total travel:4.0$^{+0}_{-0.4}$mm
- 10. Operating Life :50,000,000 Cycles(min).

<Feel is allowed to have difference before and after life test>

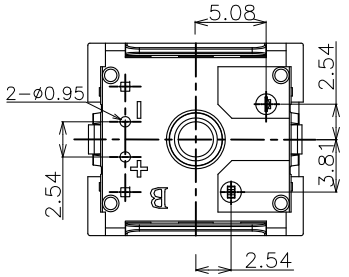

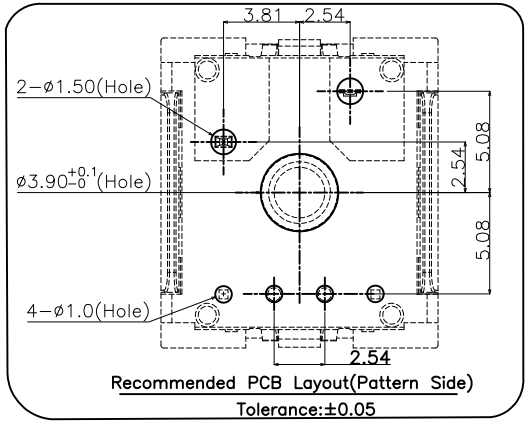

■ 轴倾斜角度

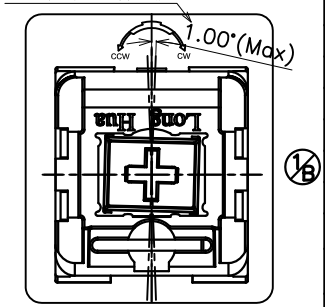

ITEM	PART NAME	TER'NO.	QTY.	MATERIAL	FINISHING	REMARK
⑧	Keystroke-2	——	1	POM	Nature	——
⑦	Base	——	1	PA66	Black	——
⑥	contact	——	2	Composite gold	——	——
⑤	Spring	——	1	Stainless Steel	——	——
④	Cover	——	1	PA66	Black	——
③	Keystroke	——	1	POM	Blue	——
②	static plate	——	1	Brass	sn-plating	——
①	movable plate	——	1	Copper Alloy	——	——

ECN NO.	REV.	DATE.	DESCRIPTION.	CHANGE.	CHECK.	APPRO.
——	B	——	Static plate coating add tin over Ni.	Wu Chuandong		
——	A	——	NEW	——	——	——

APPROVALS		DATE	DONGGUAN CITY KAIHUA ELECTRONICS CO.,LTD
DRAWN	Ma Rongquan	2015.11.06	Kaihua
CHECKED			TITLE: PG1518 Keystroke Switch(Blue shaft)
APPROVALS			PART NO. CPG151801D01
TOLERANCES ARE	30<L ±0.30; 10<L≦30 ±0.20; 5<L≦10 ±0.15; L≦5 ±0.10	ANGLE ±2°	UNIT: mm / SCALE: 1:1 / PROJ: / DRAWING NO. KHA-PG1518-001EN / SHEET 1 OF 1

凱華電子
KAIHUA EELETRONICS

Document Number:

KH-PS1608-12

产品规格书

Product Specification

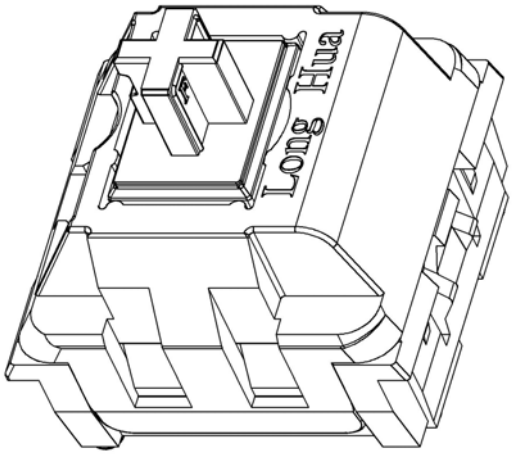

P/N: CPG151801D01			Title : PG1518 Keyboard Switch		
Rev.	ECN	Release and Revision Description:	Prepared By /Date:	Checked By/Date:	Approved By/Date:
A	— —	New releasing 初版发行	吴川东 2019-5-8	胡远锋 2019-5-8	王锋 2019-5-8

Content

目录

1. Scope/范围: 3
2. Product Application/产品应用： 3
3. Technology Parameters/技术参数 3
4. Ratings/额定性能要求 3
5. Profile Dimensions /外形尺寸 3
6. Electrical Performance/电气性能 4
7. Mechanical Performance/机械性能 5-6
8. Environmental Performance/环境性能 7-9
9. Recommended PCB Layout/推荐的 PCB 安装焊盘规格 10
10. Loading Parameter Specification/荷重参数规格 11
11. Packaging/包装 11
12. Precaution/注意事项 11-12

All Right Reserved Confidential Kaihua Electronics Co, LTD

1. Scope/范围:

This Product Specification covers the requirement of Mechanical Keyboard switch on product performance, test methods and quality assurance provisions.
本规格书内容涵盖机械键盘开关产品的要求，包括性能指标、测试方法及质量保证方面等。

2. Product Application/产品应用：

Mainly applied on computer keyboards, cash registers, industrial equipment and Man-Machine interface.
主要适用于电脑键盘，收银机、工业设备和人机界面。

3. Technology Parameters/技术参数

Ambient Humidity 工作湿度： 45~85% R.H.;
Operating Temperature Range 使用温度范围： -10℃～+70℃;
Storage Temperature Range 保存温度范围： -20℃～+70℃;
Suggested storage period 贮存期限： about 6 months 最多 6 个月
Require the tin part on the switch terminals should keep good after storage guarantee date
要求贮存期后开关端子部分上锡仍然良好。
Normal Condition:
Ambient temperature 环境温度： 20±2℃
Relative humidity 相对湿度： 65%±5% R.H.;
Air pressure 气压： 86~101KPa;

4. Ratings/额定性能要求

Rating 额定负荷： 12V AC/DC max.2V DC min.
10mA AC/DC max.10μA DC min;
Insulation Resistance 绝缘电阻： ≥100MΩ/DC 500V;
Withstand Voltage 耐电压： 100V AC 1 Minute;
Mechanical Life 机械寿命： 50,000,000 Cycles.

5. Profile Dimensions /外形尺寸

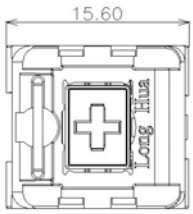

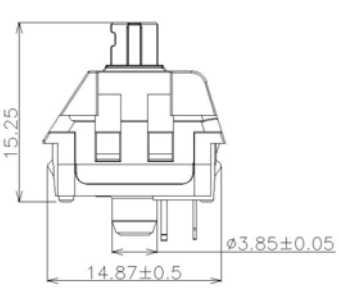

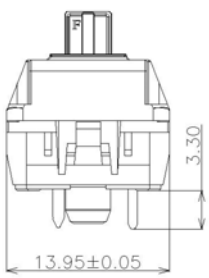

All Right Reserved Confidential Kaihua Electronics Co, LTD

6. Electrical Performance/电气性能

Item 项目	Description 项目描述	Test Condition 测试条件	Requirement 规格要求
6.1	Contact Resistance 接触电阻	Static load: (Operation force)x2, which is applied on the center of Switch stem. 静态负载：动作力的 2 倍，施加在手柄中心. Measurement tool: Contact resistance Meter. 测量工具：微电流接触电阻计(1KHz, 20mV,5~50mA) 在低电流（≤100mA）条件下测试. Measured at low current (100mA or less).	100mΩ Max 100mΩ以下
6.2	Insulation Resistance 绝缘电阻	Apply a Voltage of DC 500 V for 1 minute, according to the below method. (1) Between terminals. (2) Between terminal and Body. 输入 500V DC 电压 1 分钟，按如下接触方法测试： (1) 端子与端子之间. (2) 端子与外壳之间.	100MΩ Min 100 兆欧以上
6.3	Dielectric withstanding voltage 耐电压	Apply a Voltage of AC100 V (50~60Hz) for 1 minute, according to the below method. (1) Between terminals. (2) Between terminal and Body. 输入 100V AC 电压 1 分钟，按如下接触方法测试： (1) 端子与端子之间. (2) 端子与外壳之间.	No evidence of breakdown 无瞬断、击穿等破坏.
6.4	Bouncing 触点抖动	Operation speed：3~4 times/s 操作速度：每秒 3~4 次 Oscillo scope 示波器 Switch Bouncing Test Circuit 抖动测定回路. 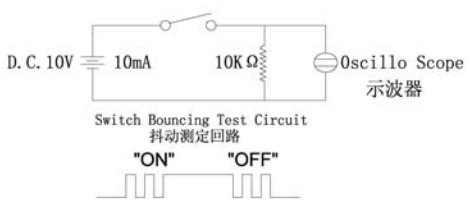 	Before Life cycle: On:5ms MAX,5 毫秒以下 Off: 5ms MAX,5 毫秒以下 After Life cycle: On:10ms MAX,10 毫秒以下 Off: 10ms MAX,10 毫秒以下

All Right Reserved Confidential Kaihua Electronics Co, LTD

7. Mechanical Performance/机械性能

Item 项目	Description 项目描述	Test Condition 测试条件	Requirement 规格要求
7.1	Load Curve 荷重曲线	Place the vertical direction of switch operation and gradually increase the load applied to the center of the stem until it stop. 开关的动作方向为垂直放置，向手柄中心逐渐施加负荷直到停止. 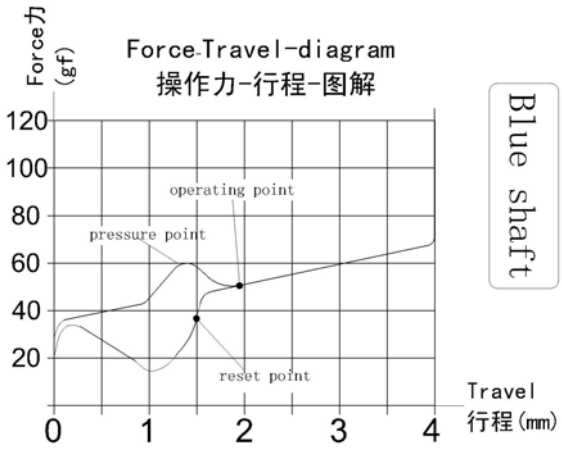	See page 11 见第 11 页
7.2	Loading parameter 荷重参数	Place the vertical direction of switch operation and gradually increase the load applied to the center of the stem until it stop. 开关的动作方向为垂直放置，向手柄中心逐渐施加负荷直到停止. 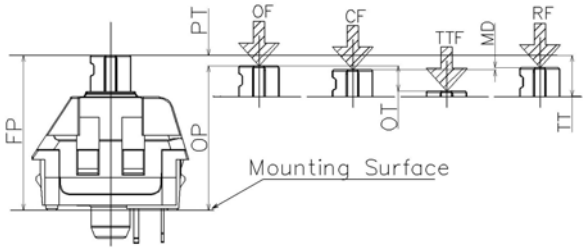	See page 11 见第 11 页

All Right Reserved Confidential Kaihua Electronics Co, LTD

7.3	Static Strength 静止强度	A static load of 3kgf shall be applied in the direction of button operation for a period of 60 seconds. 在手柄动作方向施加 3kgf 的静负荷 60 秒，然后测试参数. 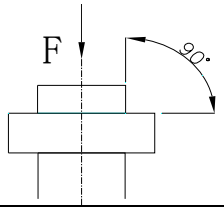	No damage (Electrical) And mechanical） 电气和机械性能正常.
7.4	Stem Pull Strength 手柄拉拔强度	Break by a pull force applied opposite to the direction of stem operation. 在推柄动作方向反向垂直施加拉力，使其破坏的程度.	5kgf Min
7.5	Shock 机械冲击	Measured by according to the below condition: (1) Acceleration: 80g 加速度 (2) Cycles of test:3 cycles each in 6 directions, for a total of 18 cycles. 试验次数：每个方向 3 次，6 个方向共 18 次. 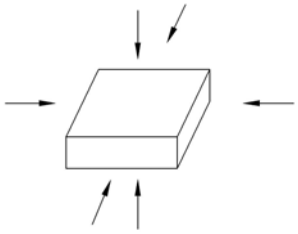	Shall meet No.6，7.1，7.2. 满足 6，7.1，7.2 要求.
7.6	Life Test 寿命测试	1) D.C.12V 10mA resistance load D.C 12V 10mA 电阻负荷 2) Operation speed : 5-6 times / s 动作速度： 5-6 次/ 秒 3) Push force : 150gf 按力: 150gf 4) Push travel : 4.0mm 按压行程: 4.0mm 5) Operation number: 50,000,000cycles 动作次数: 50，000，000 次	Contact resistance: 1000 mΩ Max 接触电阻：1000 毫欧以下 Bouncing：10ms Max 触点抖动：10 毫秒以下 Operation force： Variation rate within ± 30% 操作力的变化范围在初始值的±30%以内.

All Right Reserved Confidential Kaihua Electronics Co, LTD

8. Environmental Performance/环境性能

Item 项目	Description 项目描述	Test Condition 测试条件	Requirement 规格要求
8.1	Cold test 耐寒性	(1) Temperature : - 20±2℃ 温度： - 20±2℃ (2) Duration of test: 48h 持续时间： 48 小时 (3) Take off a drop water 去掉水珠 (4) Standard conditions after test : 1h 试验后的放置条件：1 小时	Contact resistance: 200mΩ Max Shall meet : No. 6.2 to 6.4 No. 7.1 to 7.2 接触电阻 200mΩ以下 满足: No. 6.2 to 6.4 No. 7.1 to 7.2
8.2	Heat test 耐热性	(1) Temperature : 70±2℃ 温度： 70±2℃ (2) Duration of test: 48h 持续时间： 48 小时 (3) Take off a drop water 去掉水珠 (4) Standard conditions after test : 1h 试验后的放置条件：1 小时	Contact resistance: 200mΩ Max Shall meet : No. 6.2 to 6.4 No. 7.1 to 7.2 接触电阻 200mΩ以下 满足: No. 6.2 to 6.4 No. 7.1 to 7.2
8.3	Temperature cycle 温度循环	(1) Test cycles: 5 cycles 试验周期：5 个周期 (2) Standard condition after test:1h 试验后的放置条件：1 小时	Contact resistance: 200mΩ Max Shall meet : No. 6.2 to 6.4 No. 7.1 to 7.2 接触电阻 200mΩ以下 满足: No. 6.2 to 6.4 No. 7.1 to 7.2
8.4	Soldering heat test 耐焊接热	Soldering area: T/2 of PWB thickness. (PWB: T=1.6mm) 焊接面积：印刷基板的 1/2 厚度处 Soldering temperature: 260±5℃ Soldering time: 5±0.5s 焊接温度： 260±5℃ 焊接时间：5±0.5 秒	Appearance: No abnormality. 外观无异常

	Temperature 温度	Duration of test 持续时间
1 cycle 一次循环	20±5℃	1h
	-20±2℃	1h
	20±5℃	1h
	70±5℃	1h

All Right Reserved Confidential Kaihua Electronics Co, LTD

8.5	Solder ability 可焊性	1. Hand soldering 手工焊接： Please practice according to below condition: (1) Soldering Temperature : 350±5℃ 焊接温度：350±5℃ (2) Continual soldering time: 3±0.5s 连续焊接时间：3±0.5 秒 (1) Capacity of soldering iron: ≤20w 电烙铁功率：20 瓦以下 2. Automatic PIP soldering 自动焊接： For the product of T/H according to below condition: **波峰焊温度曲线图(单波峰)** 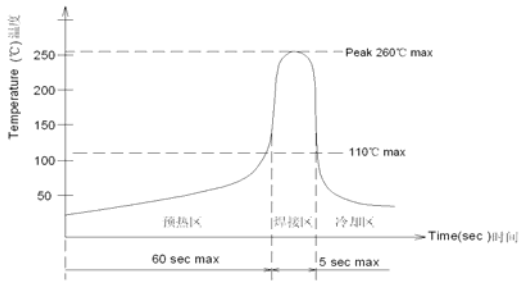 	At least 95% of surface area of immersed portion shall be covered by solder. 侵焊面积大于 95%以上.
8.6	Humidity test 耐湿性	(1) Temperature : 60±2℃ 温度：60±2℃ (2) relative humidity: 90~95% R.H. 相对湿度:90~95% R.H. (3) Duration of test: 48h 持续时间：48 小时 (4) Take off a drop water 去掉水珠 (5) Standard conditions after test: 1h 试验后的放置条件：1 小时	Contact resistance: 200mΩ Max Shall meet : No. 6.2 to 6.4 No. 7.1 to 7.2 接触电阻 200mΩ以下 满足: No. 6.2 to 6.4 No. 7.1 to 7.2
8.7	Salt Spray 盐雾测试	Apply the following environment to test: 根据下列条件进行测试： (1) Temperature : 35±5℃ 温度: 35±5℃； (2) Salt water density: 5±1% 盐水浓度: 5±1%； (3) Duration: 12hours 持续时间: 12 小时； (4) After test, the salt deposit shall be removed by running water. 实验后将盐沉积物用水冲掉	Appearance: No corrosion spot, no crack, no base plate naked. 外观：无腐蚀点，无裂纹，无裸露基材. Contact Resistance: 200 mΩ Max 接触电阻：200 毫欧以下

All Right Reserved Confidential Kaihua Electronics Co, LTD

8.8	Withstand K_2S 硫化测试	Apply the following environment to test: 根据下列条件进行测试 (1) Temperature: 35±5℃温度：35±5℃ (2)K_2S Density: 2%； 硫化钾浓度：2% (3) Duration: 2 minute. 持续时间：2 分钟	Appearance: No corrosion spot, no crack, no base plate naked. 外观：无腐蚀点，无裂纹，无裸露基材. Contact Resistance: 1000 mΩ Max 接触电阻：1000 毫欧以下

All Right Reserved Confidential Kaihua Electronics Co, LTD

9. Recommended PCB Layout 推荐的 PCB 安装焊盘规格

Mounting Options 安装选项

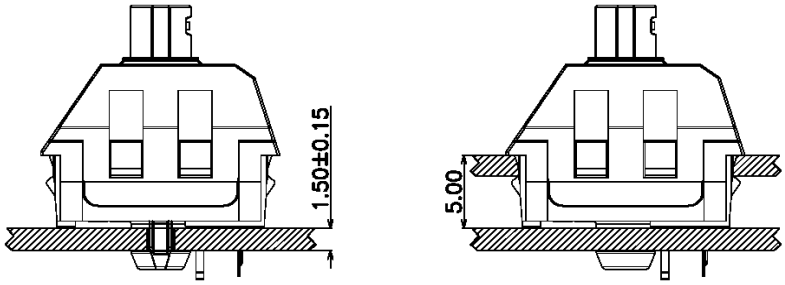

Circuit Board Layouts 电路板布局

Grid line spacing = 1.27mm 网格线间距= 1.27毫米

Keyswitch without fixation pins
按键开关不带定位柱

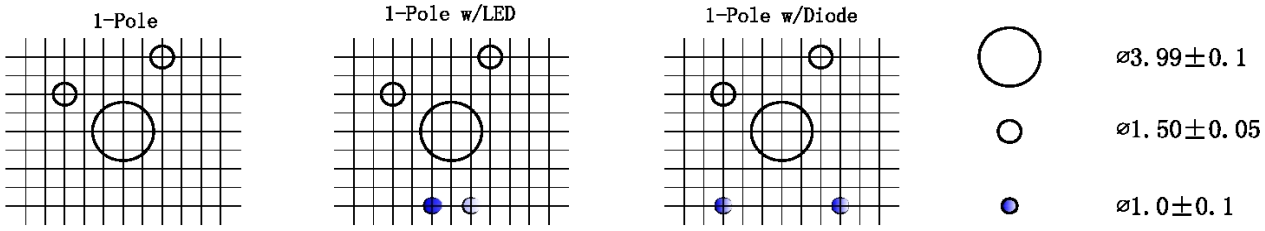

Keyswitch with fixation pins
按键开关带定位柱

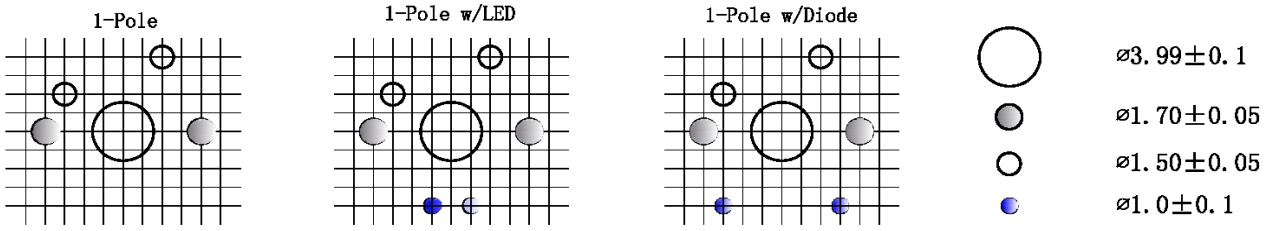

Metal Frame Cutout Dimensions

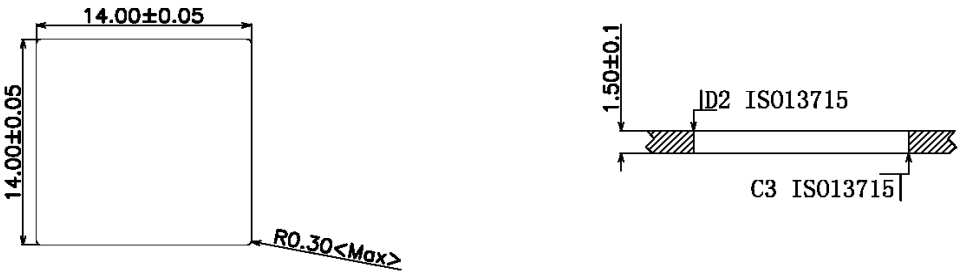

All Right Reserved Confidential Kaihua Electronics Co, LTD

10. Loading Parameter (FP/OP/PT/OF/OT /MD/CF/RF/TT) Specification 荷重参数规格：

Parameter	Unit	Specification	Remark
FP(自由行程)	mm	15.25±0.2	
OP(动作行程)	mm	13.35±0.6	
PT(导通行程)	mm	1.90±0.40	
OF(操作力)	gf	50±10	
OT(过行程)	mm	1.3	Min
MD(差动行程)	mm	0.6	Max
TF（触感力）	gf	60±10	
RF(回弹力)	gf	15	Min
TT(总行程)	mm	$4.00^{+0}_{-0.4}$	

11. Packaging 包装

Packaging type: Tray, 1000Pcs/Tray, 4000Pcs/Carton.

包装方式: Tray 盘,1000Pcs/盘, 4000Pcs/箱.



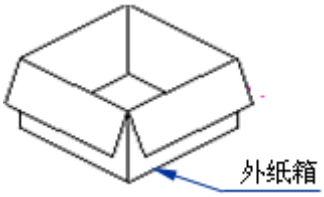

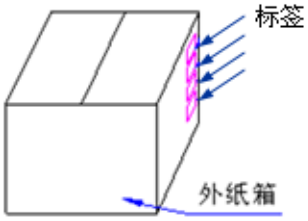

12.Precaution 注意事项

12.1 Immersion Soldering condition 浸焊条件

ITEM 项目	CONDITION 条件
Preheat temperature 预热温度	110℃ Max (Ambient temperature of soldering surface of P.W.B) 110℃以下(印刷基板焊锡面周围的温度)
Preheat time 预热时间	60s, Max 60 秒以内
Area of flux 助焊剂面积	1/2 Max of PWB Thickness 印刷基板厚度的 1/2 以内
Temperature of solder 焊锡温度	260±5℃ 260±5℃
Time of immersion 浸焊时间	Within 5s 5 秒以内
Number of soldering 焊接次数	2time Max (But should down heat of the first soldering) 2 次以内
Printed wiring board 印刷基板	Single side copper-clad laminates 单面铜箔

(1) After switches were soldered, please be careful not to clean switches with solvent

开关浸焊后,注意不要用溶剂清洗.

(2) Under the condition of using soldering iron, soldering temperature shall be 350℃ max within 3 sec.

All Right Reserved Confidential Kaihua Electronics Co, LTD

在使用铬铁的情况下，焊锡温度应在350℃以下，焊接时间3秒以内.

12.2 Notes 注意点

(1) Please be cautious not to give excessive static load or shock to switches.
注意不要施加超负荷的压力或晃动开关.

(2) Please be careful not to stack up P. W. B. after switches were soldered.
开关焊接以后,印刷基板注意不要叠放.

(3) Preservation under high temperature and high humidity or corrosive gas should be avoided Especially. When you need to preserve for a long period, do not open the carton.
保管时尤其应注意避开高湿高温和有腐蚀性气体的环境.如需长时间保存,请不要打开包装箱.

(4) Products meet the ROHS & REACH environmental management substances control standards
产品满足 ROHS & REACH 环境管理物质管制标准

All Right Reserved Confidential Kaihua Electronics Co, LTD