| VERTION | DESCRIPTION | DATE |
|---|---|---|
| A | First issue | 2020-7-6 |

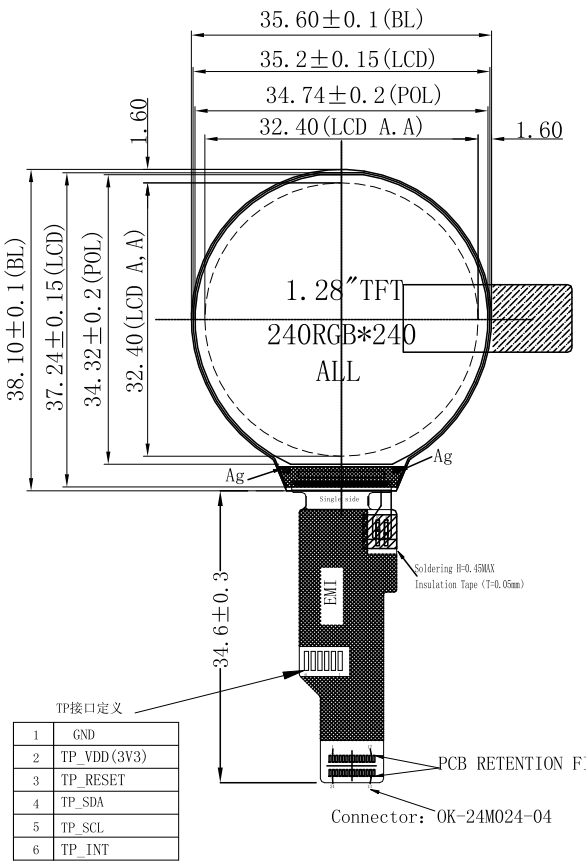


TP接口定义

| | |
|---|---|
| 1 | GND |
| 2 | TP_VDD(3V3) |
| 3 | TP_RESET |
| 4 | TP_SDA |
| 5 | TP_SCL |
| 6 | TP_INT |

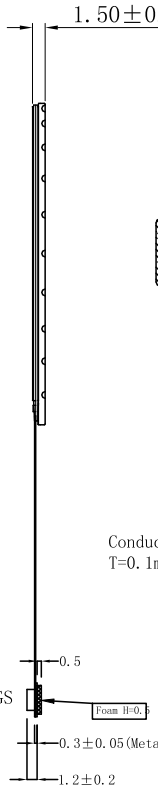


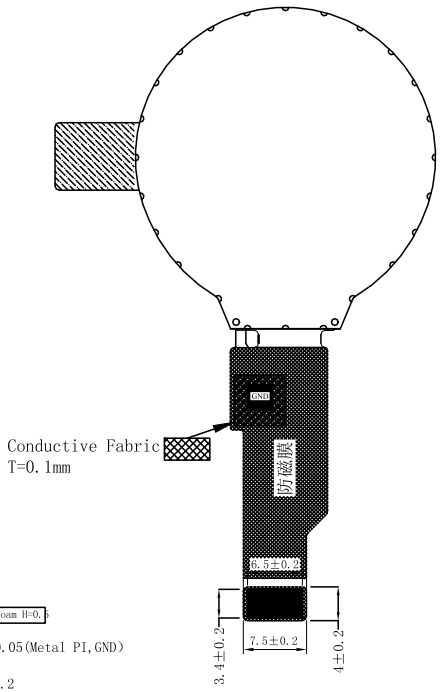


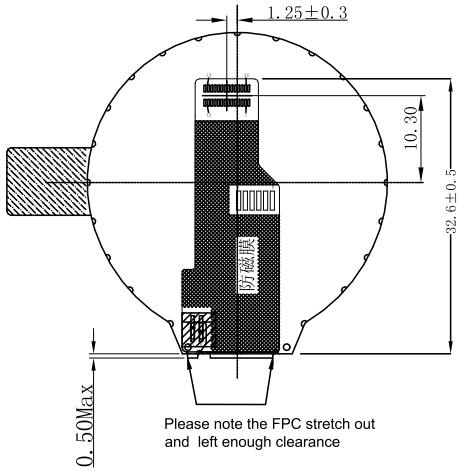


FPC folded reference

FPC shipment with unfold

| PIN | SYMBOL |
|---|---|
| 1 | LEDK-1 |
| 2 | LEDK-2 |
| 3 | GND |
| 4 | GND |
| 5 | WRX/RS |
| 6 | SDA |
| 7 | SDO |
| 8 | DCX/SCL |
| 9 | CSX |
| 10 | RESET |
| 11 | VDDIO |
| 12 | VDDIO |
| 13 | VDD(3V3) |
| 14 | VDD(3V3) |
| 15 | GND |
| 16 | GND |
| 17 | TP_VDD(3V3) |
| 18 | TP_RST |
| 19 | TP_SDA |
| 20 | TP_SCL |
| 21 | TP_INT |
| 22 | NC |
| 23 | LEDA2 |
| 24 | LEDA1 |

IF:4SPI mode

NOTES:

1. DISPLAY TYPE: 1.28″ TFT
2. VIEWING DIRECTION: All
3. POLARIZER MODE: TRANSMISSIVE/NORMALLY BLACK
4. DRIVER IC:GC9A01
5. OPERATING TEMP.: -20° C~70° C
6. STORAGE TEMP.: -30° C~80° C
7. BACK LIGHT: 2 CHIP-WHITE LED
8. LCM Luminance:350 CD/M2(TYP)
9. UNMARKED TOLERANCE:±0.2
10. Suggest opening of the lens 0.3mm bigger than LCD A.A
11. All components are ROHS compatible.

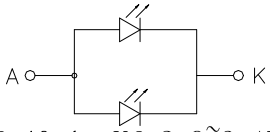


If=40mA Vf=2.9~3.1V

| CUSTOMER APPROVE | FORMIKE ELECTRONIC CO.,LTD. 深圳市科万宏电子有限公司 www.wandisplay.com | | |
|---|---|---|---|
| | MODULE NO. | KWH012ST01-F01 | VERTION: A |
| | MATERIAL NO. | | SHEET: 1 OF 1 |
| | ISSUED | CHECKED | APPROVED | UNIT: MM |
| | LEO | ZENG | LIU | DATE: Jul-06-2020 |