ABIDE BY ROHS

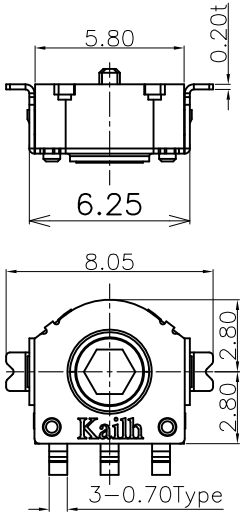

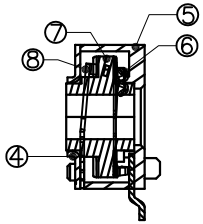

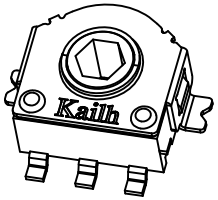

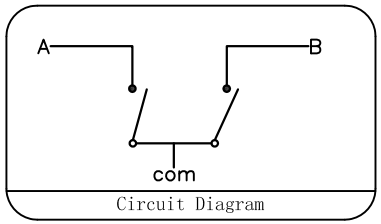

Circuit Diagram

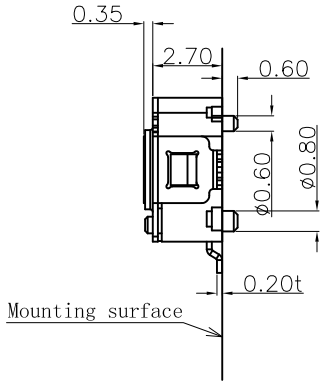

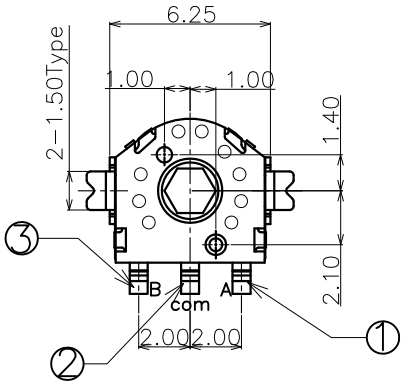

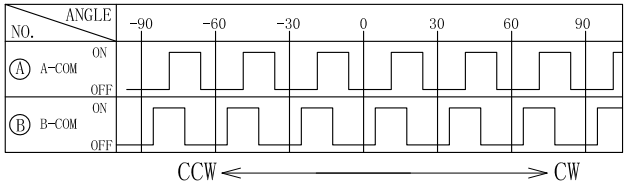

Numbers of detent: 12
Pulse/Rotation: 12 Pulse/360° (reverse)

Shaft hole shape and dimension

Shaft hole position will be at random

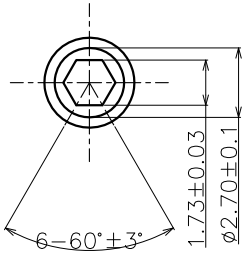

(Tolerance: ±0.1)
(P.C.Bthickness t=1.6mm)

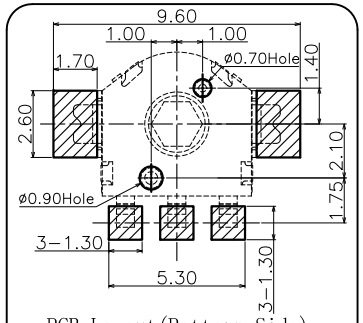

PCB Layout(Pattern Side)

■ Specification :

- 1. Rated voltage: D.C.5V
- 2. Maximum operating current(resistive load) Each lead :1mA
- 3. Resolution: 12 pulses/360° for each phase
- 4. Contact Resistance: 5Ω(Max)
- 5. Insulation resistance: 50MΩ(Min) DC50V
- 6. Dielectric strength: AC50V(50-60Hz)for 1 minute
- 7. Detent torque: 0-15 gf.cm
- 8. Life Test :100,000 Cycles(min)

ITEM	PART NAME	TER'NO.	QTY.	MATERIAL	FINISHING	REMARK
⑧	Fixed Plate	——	1	Stainless Steel	——	——
⑦	Revolving Wheel	——	1	NYLON	Black	UL 94V-0
⑥	Contact	——	1	Phosphor bronze	——	——
⑤	Base	——	1	NYLON	Black	UL 94V-0
④	Shell	——	1	Iron	Plating Nickel	
③	Terminal	3	1	Brass(0.2t)	Plating Silver	——
②	Terminal	2	1	Brass(0.2t)	Plating Silver	——
①	Terminal	1	1	Brass(0.2t)	Plating Silver	——

备注：底座背面的压针孔★是根据产品模具成型要求而定的，
其规格的大小与数量的多少对产品结构、功能及使用无任何影响。

ECN NO.	REV.	DATE.	DESCRIPTION.	CHANGE.	CHECK.	APPRO.
——	A	——	NEW	——	——	——

APPROVALS		DATE
DRAWN	WuYu	2018.04.23
CHECKED		
APPROVALS		

东莞市凯华电子有限公司
DONGGUAN CITY KAIHUA ELECTRONICS CO.,LTD

TITLE:	Encoder(H=2.80mm/SMT)		
PART NO.	EN652812A03		
UNIT: mm	SCALE: 1:1	PROJ:	
DRAWING NO.	KHA-EN6528-006EN	SHEET 1 OF 1	

TOLERANCES ARE			ANGLE
	30<L	±0.30	±2°
	10<L≦30	±0.20	
	5<L≦10	±0.15	
	L≦5	±0.10	