WIN-KARE TECHNOLOGY CO.,LTD.

Tel: +86 0755 25003073 Fax: +86 0755 25003079
Mobile: +86-13600172996; +86-13302965579
E-mail: service@win-kare.com; marketing@win-kare.com

ROCKER SWITCH MODEL MR2 SERIES

RATING:16(8)A 125/250V~T55 (cURus/ENEC15)
DIELECTRIC VOLTAGE-WITHSTAND:1,500VAC FOR 1 MINUTE
INSULATION RESISTANCE:DC 500V 100MΩ (MIN.)
CONTACT RESISTANCE:20mΩ INITIAL (MAX.)
WATERPROOF GRADE:IP68

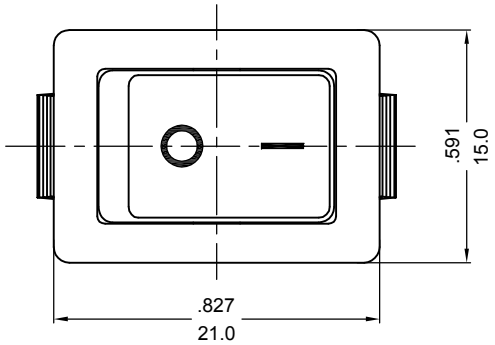

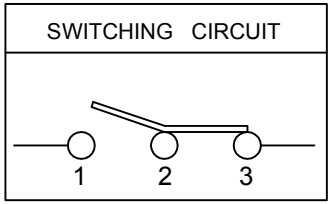

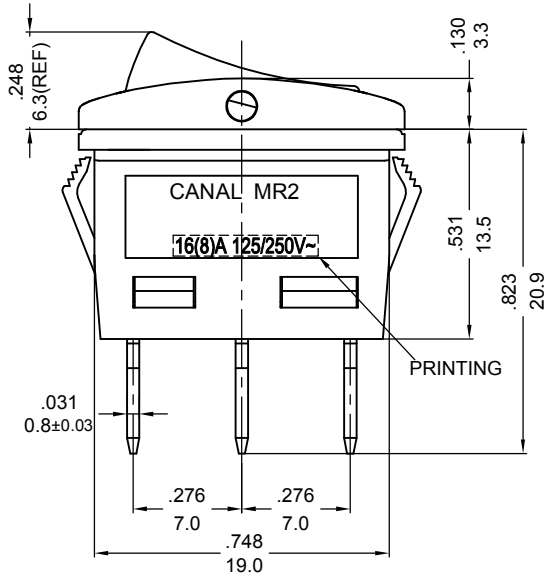

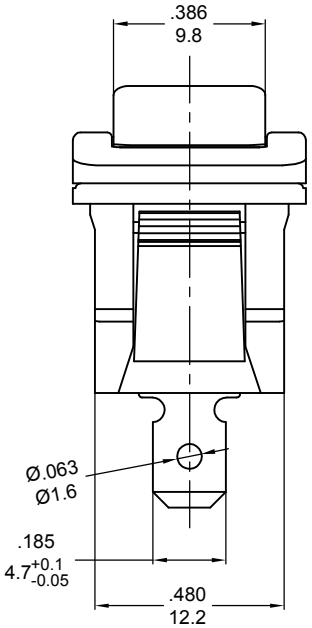

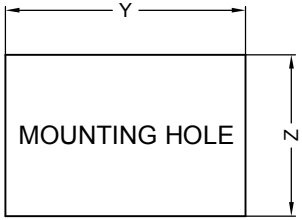

X(PANEL THICKNESS)	Y(CUTOUT DIMENSION)	Z(CUTOUT DIMENSION)
0.75~1.25mm	$19.2^{+0.1}_{-0}$ mm	$12.9^{+0.15}_{-0}$ mm
1.25~2mm	$19.4^{+0.1}_{-0}$ mm	$12.9^{+0.15}_{-0}$ mm
2~3mm	$19.8^{+0.1}_{-0}$ mm	$12.9^{+0.15}_{-0}$ mm

PANEL CUTOUT DIMENSION TABLE

NOTE: TOLERANCES UNLESS OTHERWISE SPECIFIED:±.012/0.3 (in/mm)

REVISION	DESCRIPTION	REVISED BY	TOLERANCES				ANGLE ½°	UNIT	mm	PART NAME	MR2 SPEC DRAWING	DWG NO
4			DRAWN BY	楊偉韶	DESIGNED BY	蔡 劍	SCALE	2/1				S8165A
3												
2			CHECKED BY		APPROVED BY		DATE	2020.08.13		PART NO	MR2-120C5W-NBBQ-29NC	
1 2020.08.13	首次出圖	楊偉韶										