## H18E

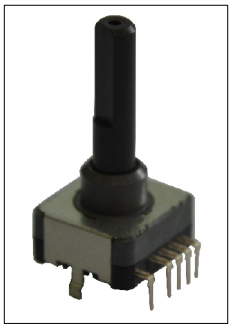

### SPECIFICATION

| | |
|---|---|
| Rating | : 1mA 10V DC |
| Position No. | : 12/16 |
| Rotation Angle | : 30 °/22.5° |
| Operating Force | : 6 0± 20mN.m |
| Operating Life | : 30, 000 cycles |

## Outline Drawing

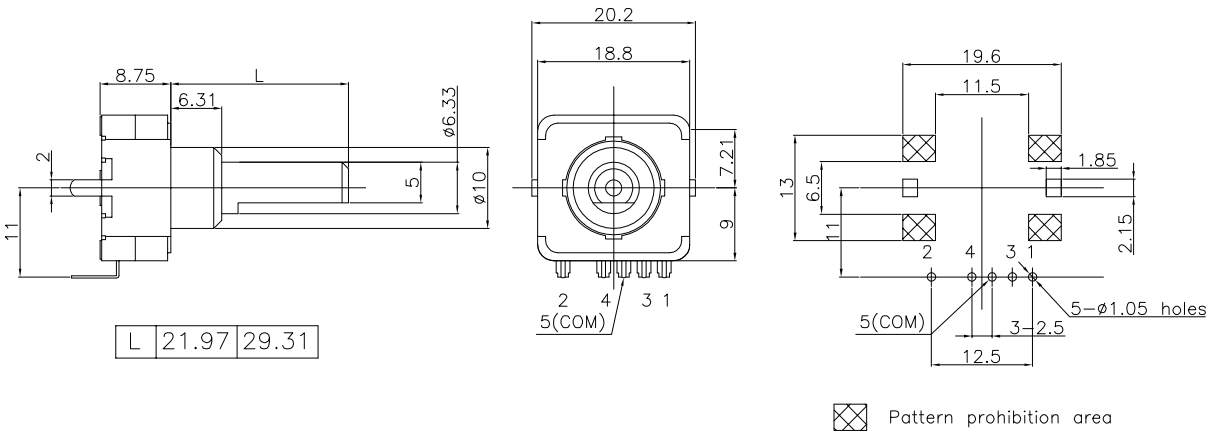


## H18EAG-12P

| Position No. | | 1 | 2 | 3 | 4 | 5 | 6 | 7 | 8 | 9 | 10 | 11 | 12 |
|---|---|---|---|---|---|---|---|---|---|---|---|---|---|
| Rotation angle (°) | | 0 | 30 | 60 | 90 | 120 | 150 | 180 | 210 | 240 | 270 | 300 | 330 |
| TERMINAL NO. | 1 | | ● | ● | | | ● | ● | | | ● | ● | |
| | 2 | | | ● | ● | ● | ● | | | | | | |
| | 3 | | | | | ● | ● | ● | ● | ● | ● | | |
| | 4 | | | | | | | | | ● | ● | ● | ● |
| | 5(COM) | ● | ● | ● | ● | ● | ● | ● | ● | ● | ● | ● | ● |

## H18EAG-16P

| Position No. | | 1 | 2 | 3 | 4 | 5 | 6 | 7 | 8 | 9 | 10 | 11 | 12 | 13 | 14 | 15 | 16 |
|---|---|---|---|---|---|---|---|---|---|---|---|---|---|---|---|---|---|
| Rotation angle (°) | | 0 | 22.5 | 45 | 67.5 | 90 | 112.5 | 135 | 157.5 | 180 | 202.5 | 225 | 247.5 | 270 | 292.5 | 315 | 337.5 |
| TERMINAL NO. | 1 | | ● | ● | | | ● | ● | | | ● | ● | | | ● | ● | |
| | 2 | | | ● | ● | ● | ● | | | | | ● | ● | ● | ● | | |
| | 3 | | | | | ● | ● | ● | ● | ● | ● | ● | ● | | | | |
| | 4 | | | | | | | | | ● | ● | ● | ● | ● | ● | ● | ● |
| | 5(COM) | ● | ● | ● | ● | ● | ● | ● | ● | ● | ● | ● | ● | ● | ● | ● | ● |