REV.	MODIFICATION	ECN No.	NAME	DATE
A0	New Release	———		

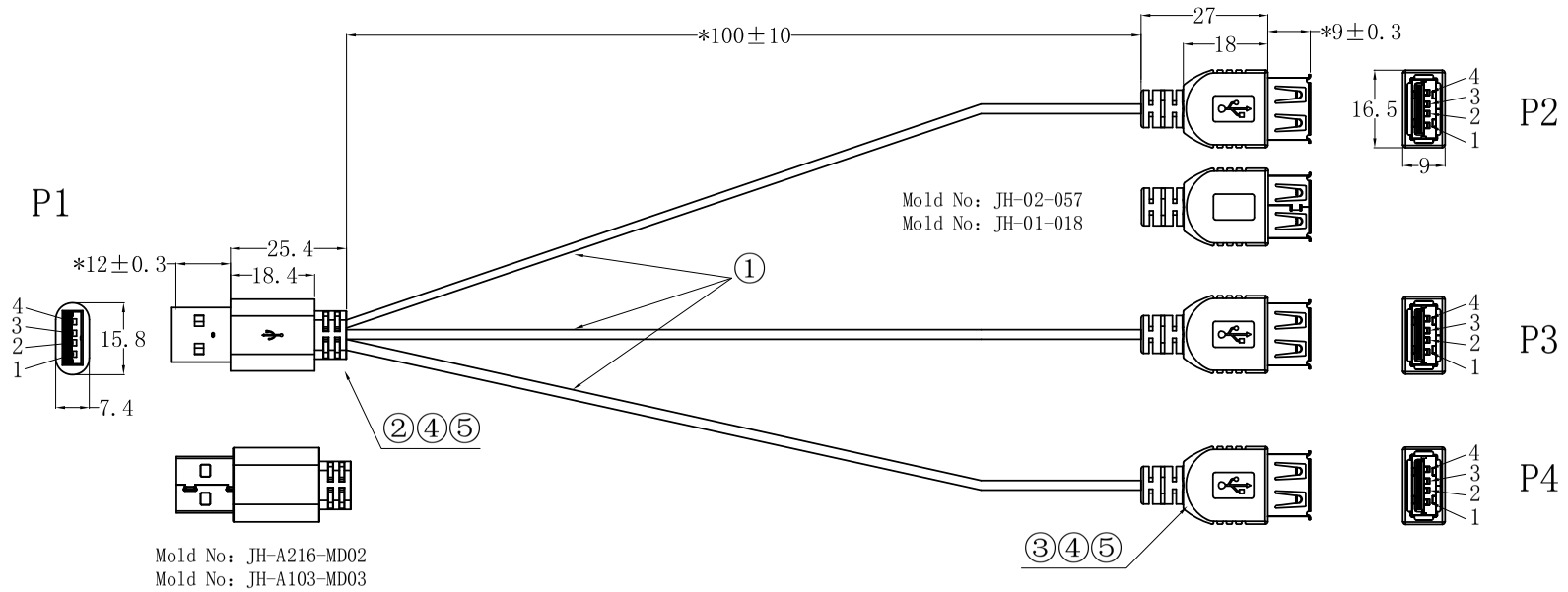

Figure

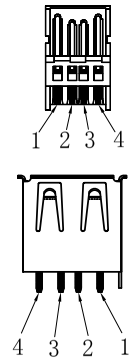

ALLIGNMENT

P1		P2		P3		P4
1	Red	1	Red	1	Red	1
4	Black	4	Black	4	Black	4

Notes:

1. short, open , misassigement, abrupt short or open circuit must be 100% tested
2. Conductire resistance: 3Ω MAX
3. Insulation resistance: 10MΩ MIN
4. Test voltage: DC 200V
5. No sratch, dents, impurities on the apperance

ITEM	P/N	NAME	SPEC	Q'TY	UNIT	NOTES
5	P00200000	over mold	PVC 45P white		g/PCS	
4	P31100000	inner mold	PP white		g/PCS	
3	C010070800	USB AF	INSULATOR:THERMOPLASTIC UL 94V-0 White CONTACT:Copper Alloy GOLD PLATE Shell:SPCC Nickel Piating	1	PCS	
2	C000130201	USB AM	USB A Male connector: SPCC shell with Nickel plating and Housing: white contact AU 1U"	1	PCS	
1	AC0002010300	Cable	(11/0.16BS ID:1.1PVC Red, Black)*2C+ PVC 60P white OD:2.8±0.05 (L=330MM*3PCS)	3	PCS	double

JIANHAN
东莞市江涵电子有限公司
DONG GUAN JIANG HAN ELECTRONICS CO.,LTD
TEL:0769-87815809 FAX:0769-82065390
ADD:广东省东莞市塘厦镇石潭埔青云岭工业区骏鹏路6号

产品名称: PRODUCT NAME		USB AM TO 3PCS/USB AF CABLE L=120mm		核 准 Approved by	
客户料号: Custo mer P/N	/	材 质: Material	/	审 核 Checked by	
JH-料号: JH-P/N	F030216HW	图 号: Drawing No	JH-DW-A407	制 图 Drawn by	Wangshujun 2014-10-20

REV.: A0	SCALE: FIT
UNIT: MM	SHEET:1 OF 1
GENERAL TOLERANCES	
X.±0.30	X°.±2°
.X±0.20	.X°.±0.5°
.XX±0.10	.XX°.±0.3°
THIRD ANGLE	