Item	Date	Remark
A	20211101	Original Drawing

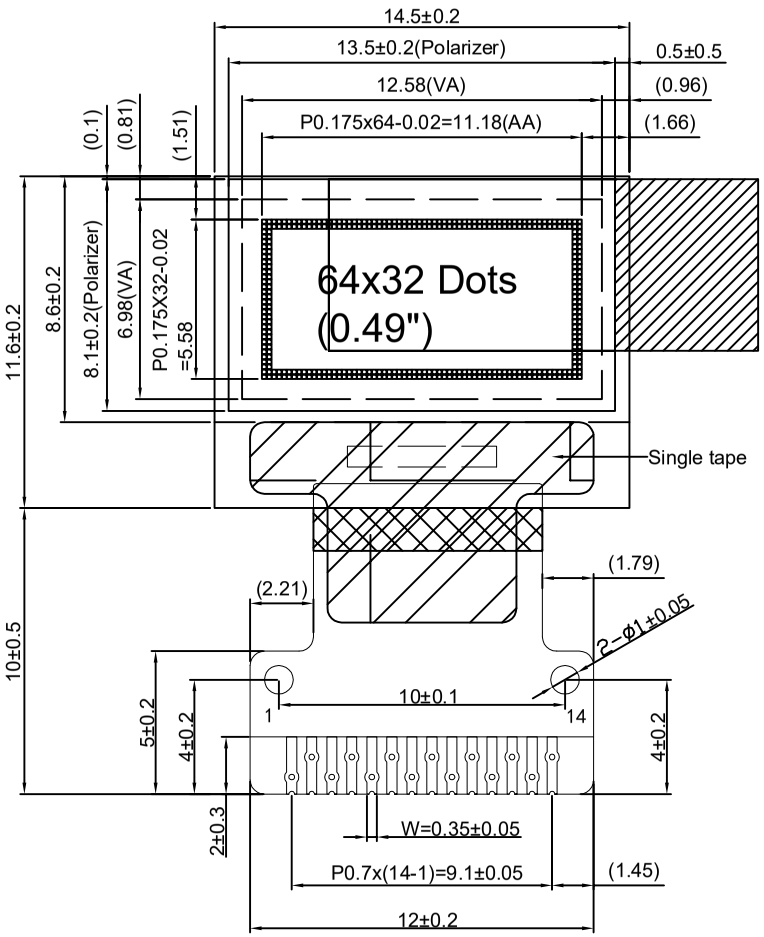

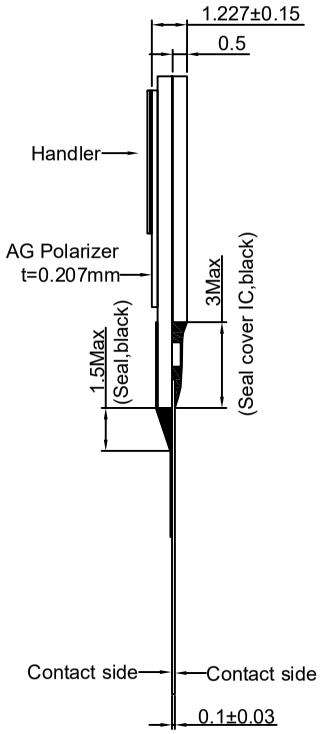

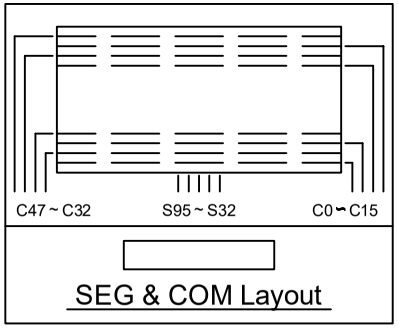

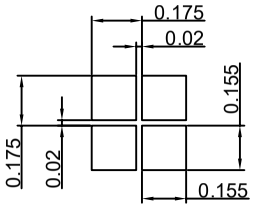

Pin Assignment	
NO.	SYMBOL
1	C2P
2	C2N
3	C1P
4	C1N
5	VBAT
6	VBREF(NC)
7	VSS
8	VDD
9	RES#
10	SCL
11	SDA
12	IREF
13	VCOMH
14	VCC

Notes:

1. Color: White
2. Driver IC: SSD1315
3. FPC Number: NFP1315-99
4. Interface: IIC
5. General Tolerance: ±0.30

Customer Approval Signature	ZTL Dongguan ZTL Technology Co., Ltd.						Drawing Number		Rev.
							N049-6432TSWPG02-H14		A
	Unless Otherwise Specified		Title	ZT-049-6432TSWPG02 Folding Type OEL Display Module Pixel Number: 64 x 32, Monochrome, COG Package			Material		
	Unit	mm					Soda Lime / Polyimide		
	General Roughness								
	Tolerance			Drawn	E.E.	Panel / E.	P.M.		
	Dimension	±0.3	By	Jesen				Scale	Sheet	Size
	Angle	±1	Date	20211101				1:1	1 of 1	A3