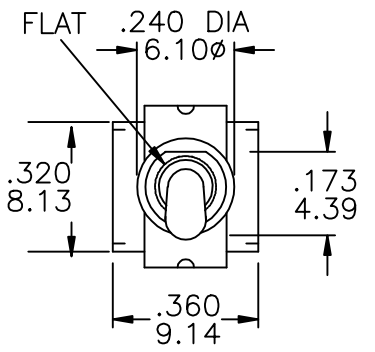

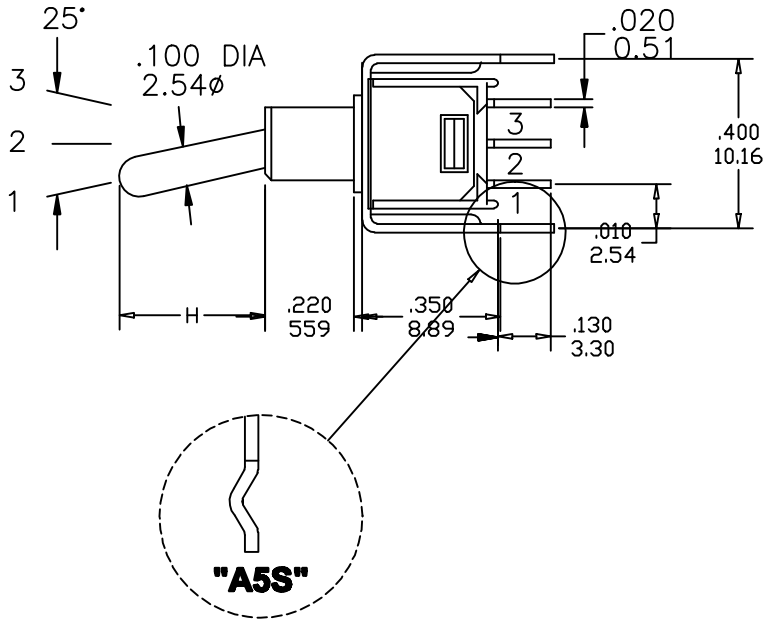

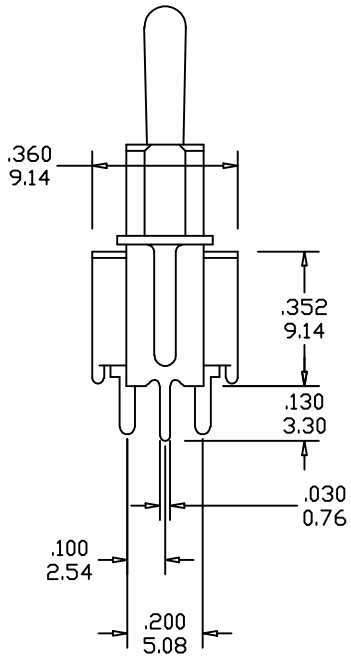

Schematic

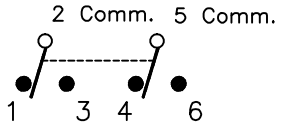

Actuator	H
S	9.40
T	5.33

P.C. MOUNTING

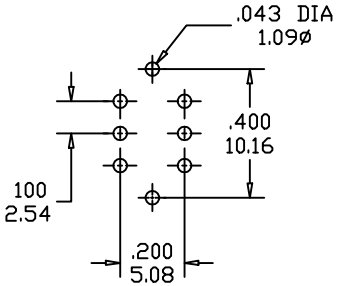

Model No.	Switching Position		
TS-5	ON	NONE	ON
TS-5A	ON	OFF	ON
TS-5B	ON	NONE	(ON)
TS-5H	(ON)	OFF	(ON)
TS-5I	ON	OFF	(ON)
TS-5C	ON	ON	ON
Term. Comm.	2-3,5-6	OPEN	2-1,5-4

NO.	Edition	Modified Contents	Name	Date
1	A0	NEW		05.04.25

Nominal Tolerance	
Range	Tolerance
0 ~ 1	±0.10
1 ~ 4	±0.20
4 ~ 16	±0.30

Part no. TS-5A-SE1Q-A5

Dwg no.

Part Name.

TS40-T/ DPDT Sub-Miniature Toggle Switches

深圳易凯达科技有限公司
WIN-KARE TECHNOLOGY CO.,LTD.

Scale 2:1

Unit m/m (inch)

Rev. 0

Check	
Drawer	
Date	
Edition	A0