ABIDE BY WEEE & ROHS

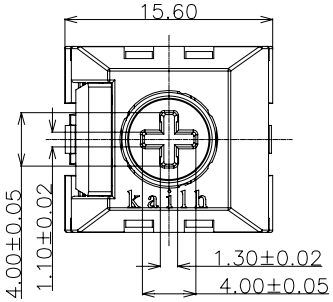

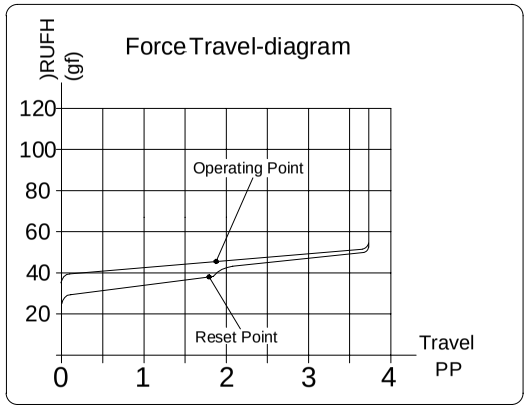

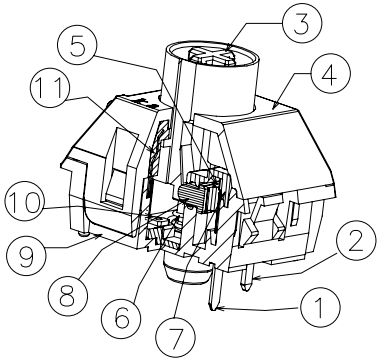

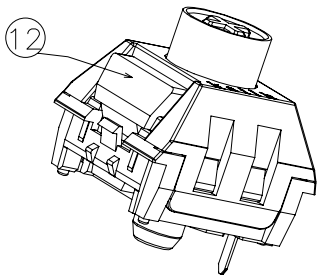

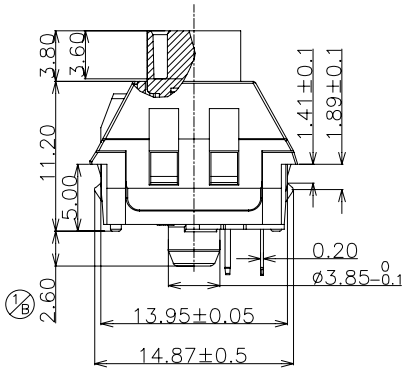

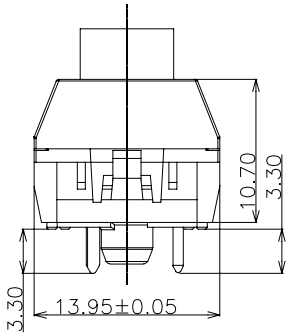

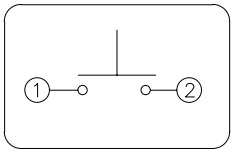

Specification :

1.Rating: 12 VAC/DC max. 2 VDC min.
P$ $& '& PD[±$ '& PLQ
&RQWDFW 5HVLVWDQFH P¥ 0D[
,QVXODWLRQ 5HVLVWDQFH 0¥ 0LQ '& 9
4.Withstand Voltage: AC100V(50-60Hz) for 1 minute
2SHUDWLRQ)RUFH f JI
&RQGXFWLRQ WUDYHO f PP
7RWDO WUDYHO f PP
8.Electrical Life: 100,000,000 Cycles(min).
9. Degree of protection: IP54(Only for the electrical functional Box sealed part.)
<Feel is allowed to have difference before and after life test>

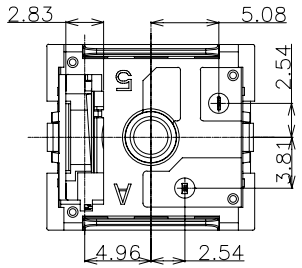

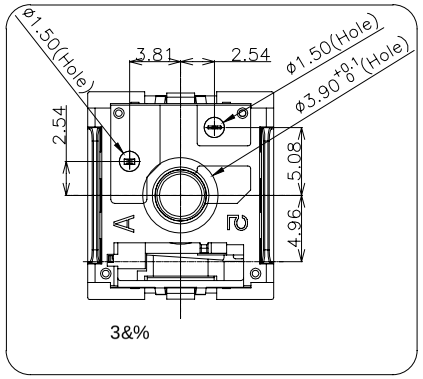

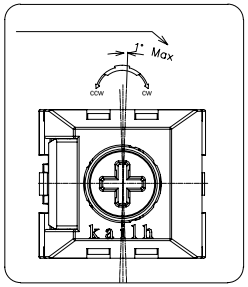

	ITEM	PART NAME	TER'NO.	QTY.	MATERIAL	FINISHING	REMARK
	⑫	Light guide	——	1	PC	Nature	——
	⑪	Rubber	——	1	TPE/Stainless Steel	Nature	——
	⑩	Rubber	——	1	TPE/Stainless Steel	Nature	——
	⑨	Base	——	1	Nylon	Blue	——
2/B	⑧	Slider	——	1	POM	White	——
	⑦	Protecting Cover	——	1	PC	Nature	——
	⑥	Spring	——	1	Stainless Steel	Nature	——
	⑤	Contact	——	2	Composite gold	——	——
	④	Cover	——	1	PC	Blue	——
	③	Keystroke	——	1	Clear plastic	Nature	——
3/B	②	Static Plate	——	1	Brass	Sn over Ni-plating	——
	①	Movable Plate	——	1	Copper Alloy	Nature	——

APPROVALS		DATE	
DRAWN	HuHaixin	2022.04.07	KAIHUA ELECTRONICS CO.,LTD
CHECKED			TITLE: PG1511F Keystroke Switch
APPROVALS			PART NO: CPG1511F01S129
TOLERANCES ARE	30<L ±0.30; 10<L≦30 ±0.20; 5<L≦10 ±0.15; L≦5 ±0.10	ANGLE ±2°	UNIT: mm; SCALE: 1:1; PROJ:
			DRAWING NO. KHA-PG1511F-156EN; SHEET: 1OF1

ECN NO.	REV.	DATE.	DESCRIPTION.	CHANGE.	CHECK.	APPRO.
——	B	2022.08.19	Base size and slider color and static plate material change.	HuHaixin		
——	A	——	NEW	——	——	——