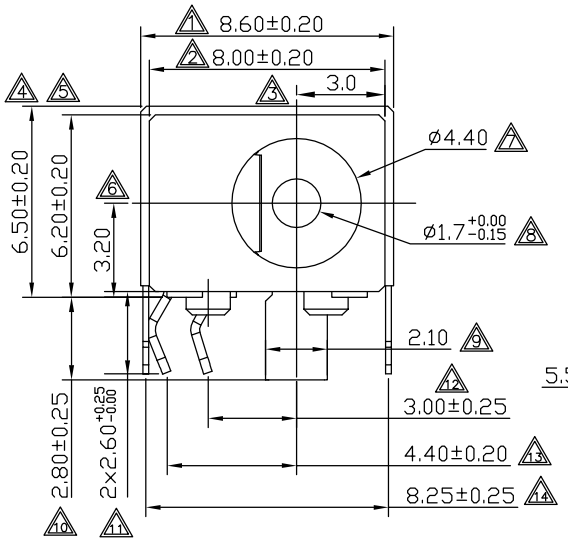

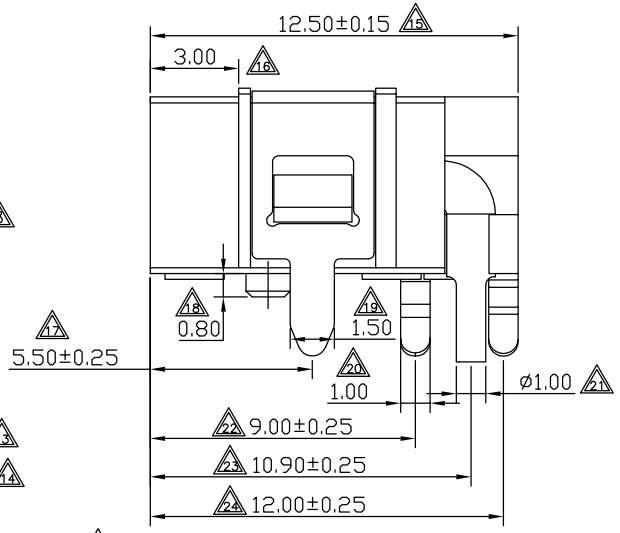

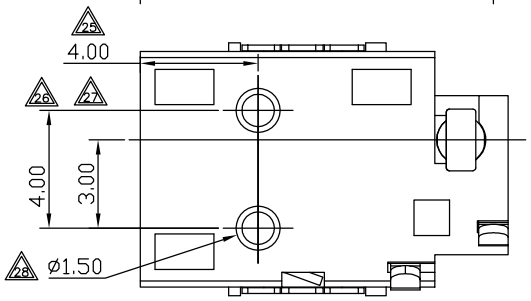

SCHEMATIC

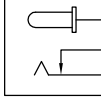

P.C.B LAYOUT
TOP VIEW

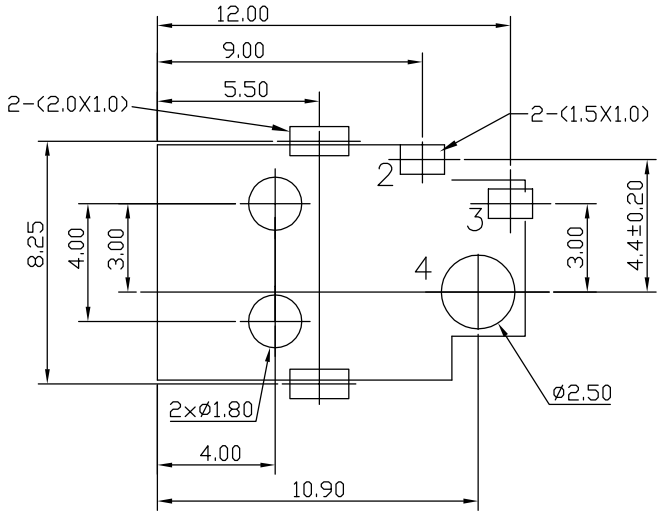

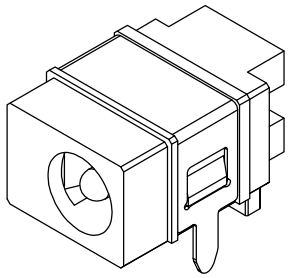

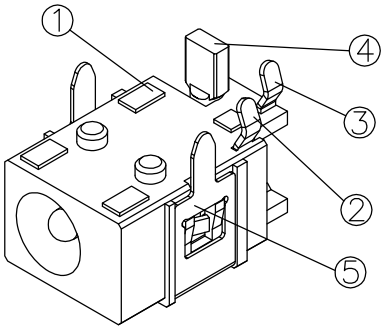

RoHS Compliant
Process Capable
Level-1 Controlled Substances are banned

SPECIFICATION
1.Rating : DC 20V 3.0A;
2.Contact resistance: ≤0.03Ω;
3.Insulation resistance: ≥100MΩ (DC250V);
4.Withstand voltage: 500VAC ;
5.Insertion and extraction force: 3-30N;
6.life test: 5,000 cycles。
7.Marked △ are important dimensions.

NO.	DESCRIPTION	QTY	MATERIAL	COLOR	REMARK
5	SHELL	1	BRASS	———	Ni-Plating
4	PIN	1	BRASS	———	Sn-Plating
3	CURVE PIEVE	1	BRASS	———	Ag-Plating
2	SPRING	1	BRONZE	———	Ag-Plating
1	HOUSING	1	PA9T	———	———

GENERAL TOLERANCE
UNLESS OTHERWISE SPECIFIED

盛 聰 电 子 有 限 公 司
SHENG CONG ELECTRONIC CO.,LTD

General	Angle
X ±0.30	X °± 3°
X.X ±0.25	X.X °± 2°
X.XX ±0.15	X.XX °± 1°

CUSTORMER COPY

TITLE: DC-JACK

PART NO. DJ-D023W-3 (k)

PROJ: SCALE: 1:1 UNIT:mm REV: A4 SHEET: 1 OF 1

ECN(DCN) NO.	REV	DATE	DESCRIPTION	CHANGE	APPRO.
———	0	13'/04/17	NEW	JASON	Max.hu

DESIGN	Jason	13'/04/17
CHECK	Jason	13'/04/17
APPRO.	Max.hu	13'/04/17

Original:Design: Jason Check: Jason Appro:Max.hu Date: 13'/04/17