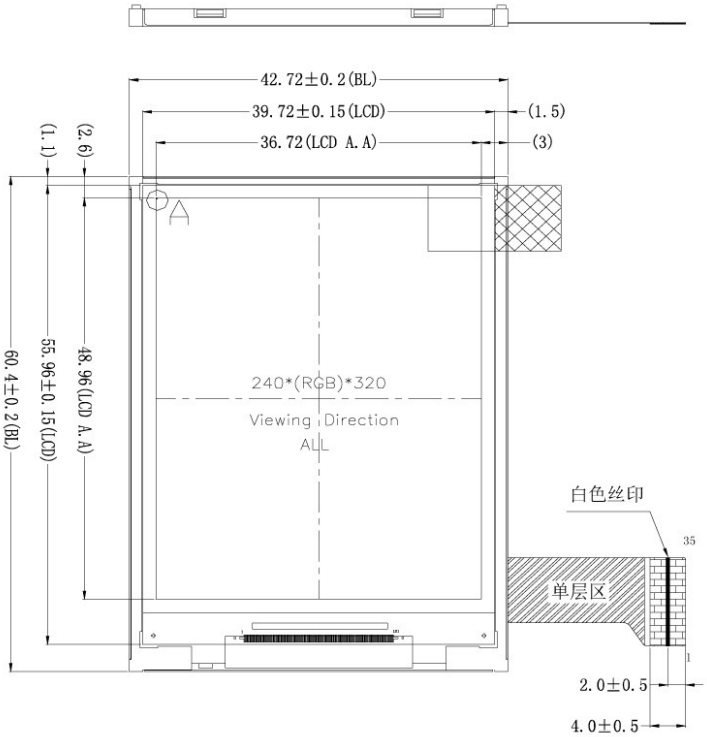

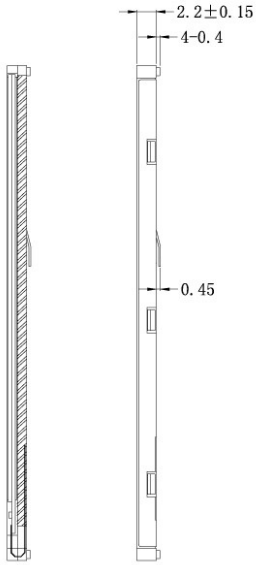

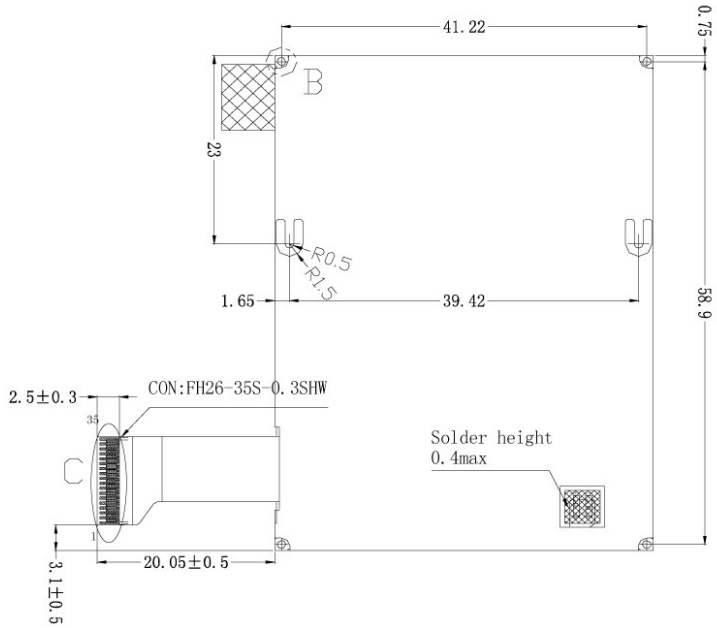

Pin Description

Pin	Name	
1	GND	
2	IM0	
3	IM1	
4	FMARK	
5	NC	
6	DB17	21
7	DB16	22
8	DB15	23
9	DB14	24
10	DB13	25
11	DB12	26
12	DB11	27
13	DB10	28
14	DB9	29
15	DB8	30
16	IOVCC	31
17	DB7	32
18	DB6	33
19	DB5	34
20	DB4	35

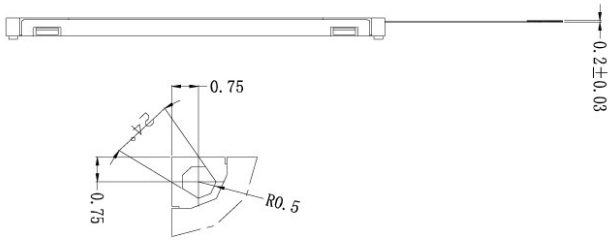

B DETAIL SCALE:4/1

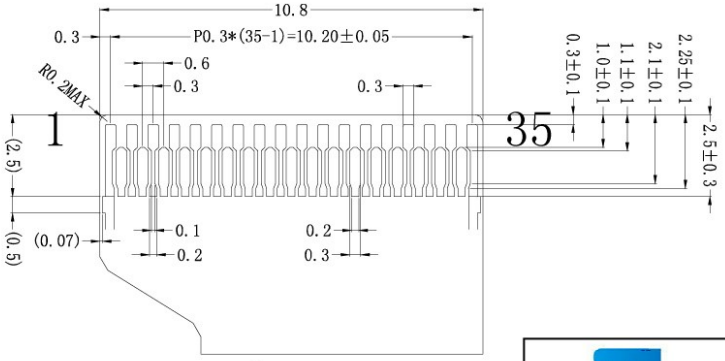

C DETAIL SCALE:4/1

Display Type	TFT
	TRANS
Viewing Angle	ALL
LCD Driver IC	ILI934
Operating Voltage	VCC=
Operation Temperature	-20°C
Storage Temperature	-30°C
Interface	MCU
Backlight	4-LED
Surface luminance	300c
White X/Y	--

CIRCUIT DIAGRAM
(20mA@12.8V)

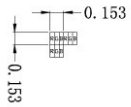

DOTS DETAIL SCALE:10/1

fied tolerance is ±0.2mm
)" are for referrence dimension
ace connector: FPC
EQUEST

精进光电 JINGJIN

东莞市精进光电有

Jingjin Optoelectronics

DRAWN		UNIT	Customer NO.
		mm	
CHECKED	SCALE	NO.	Part NO. JTA241401
	1:1	1/1	
APPROVED	DATE	VERSION	TITLE OUTLINE
		A	