Specification

Brand	GUANGDONG COMPUTER INTELLIGENCE DISPLAY CO. LTD	
Name	Android All-in-One Computer	
Display	**Screen Size**	13.3 inch
	Screen Resolution	1920*1080
	Luminous	400 cd/m2
	Color Quantitis	16.7M
	Contrast	1000:1
	Visual Range	85/85/85/85 (Typ.)(CR≥10)
	Display Size	293.76(W)×165.24(H) mm
Touch Parameter	**Reaction Type**	Electric capacity reaction
	Lifetime	More than 50 million times
	Surface Hardness	> 7H
	Effective Touch Strength	45g
	Glass Type	Chemical reinforced perspex
	Luminousness	> 85%
Hardware	**MAINBOARD MODEL**	**RK3288**
	CPU	RK3588 Cortex-A76 qual-core +Cortex-A55 qual-core 2.4GHz
	GPU	Mali-T764 quad-core
	Memory	8G(16G/32G)
	Harddisk	64G(maximum128G)
	Operate system	Android 12
	3G Module	Available for purchase
	4G Module	Available for purchase
	WIFI	5G
	Bluetooth	BT5.0
	GPS	Available for purchase
	MIC	Available for purchase
	RTC	Supporting
	Awaken through network	Supporting
	Timing switch	Supporting
	System upgrade	Supporting hardware TF/USB upgrade
Interfaces	**MAINBOARD MODEL**	**RK3288**
	DC Port 1	1*DC12V/5525 socket
	DC Port 2	1*DC9V-36V / 5.08mm phoenix 3 pin
	HDMI	1*HDMI
	USB-OTG	1*USB3.0
	USB-HOST	1*USB3.0
	RJ45 Ethernet	2*10M/100M/1000M Self-adaptive ethernet
	SD/TF	1*TF datas storage,maximum 128G
	Earphone jack	1*3.5mm Standard
	Serial-Interface RS232	2*COM
	Serial-Interface RS422	Replacement available
	Serial-Interface RS485	Replacement available
	SIM Card	SIM card standard interfaces,customization available
Parameter	**Material**	CNC aluminum oxgenated drawing craft for the front surface frame
	Color	Black
	Power adapter	AC 100-240V 50/60Hz CCC certificated、CE certificated
	Power dissipation	≤12W

	Power output	DC12V / 5A
Other Parameter	**Backlight lifetime**	50000h
	Temperature	Working：-10 ~ 60 °C；Storage-20 ~ 60 °C
	Install	Embedded snap-fit/wall hanging/desktop louver bracket/foldable base/cantilever type
	Guarantee	Whole computer free for maintain in 1 year
	Maintenance	Three guarantee: 1guarantee repair,2guarantee replacement,3guarantee sales return.Mail for maintain
	N.W.	4KG
	Product size (not in cluding	363*241*59mm
	Range for embedded trepa	349*227mm
	Carton size	448*326*125mm
	Power adapter	Available for purchase
	Power line	Available for purchase
	Parts for install	Embedded snap-fit * 4，PM4x30 screw * 4
Engineering dimention drawing	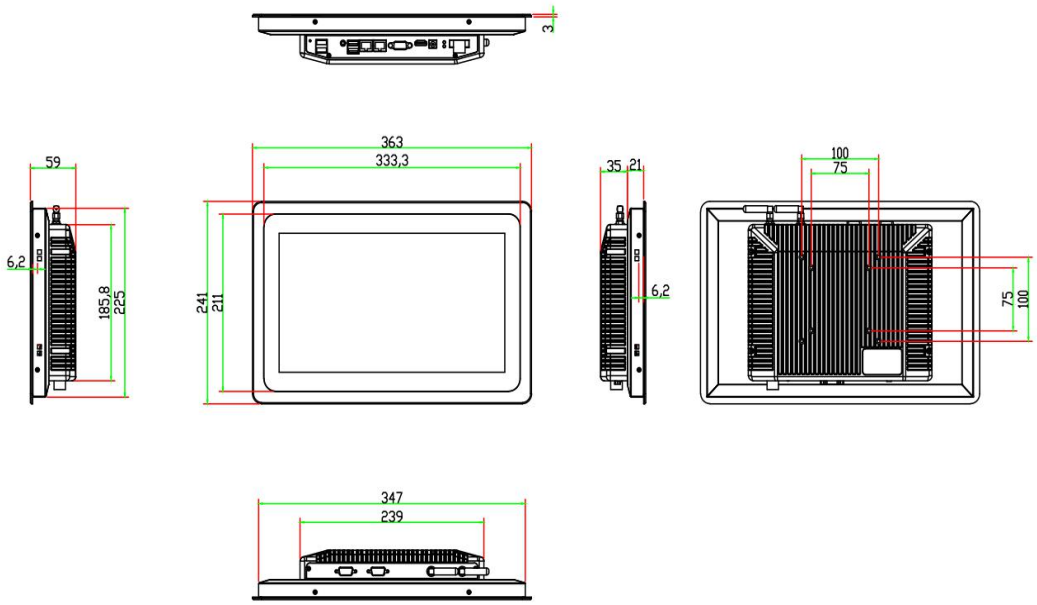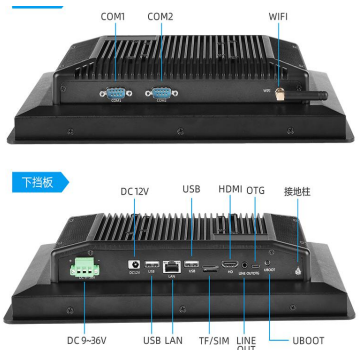	
Pictures of real product