CATEGORY	DESCRIPTION	P/N #
CONNECTOR	RJ45+Transformer 10/100Mbps with LED	MJ3B-B212-RSL25T002-1

原料号为 :MJ002B-B212-RSL21T02L
变更后料号为: MJ3B-B212-RSL25T002-1

REV.	ECN NO	DESCRIPTION	REVISED	DATE
R01	———	New Release	Kelly	2008.4.14

ELECTRICAL SPECIFICATIONS @ 25°C+/-5°C unless otherwise noted:

Insertion Loss: 1-100MHZ -1.0dB MAX
Return Loss: 1-30MHZ -16.0dB MIN
30-60MHZ -14.0dB MIN
60-80MHZ -10.0dB MIN

Cross Talk: 1-30MHZ -40.0dB MIN
30-60MHZ -35.0dB MIN
60-80MHZ -30.0dB MIN

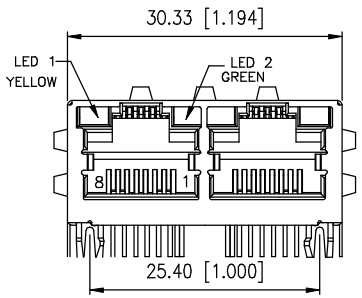

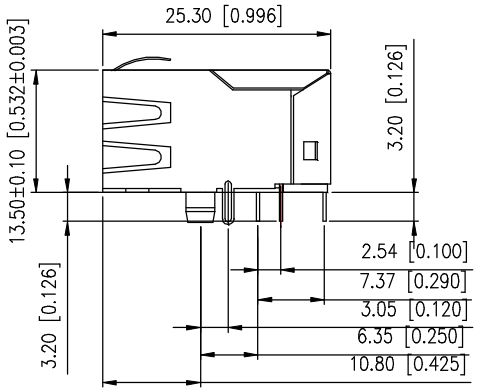

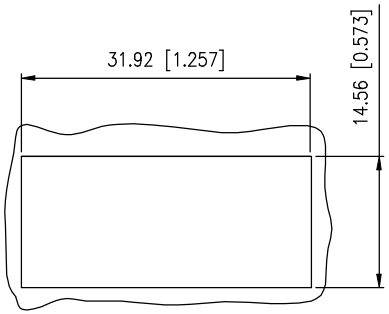

RECOMMENDED
PANEL CUTOUT DIMENSION

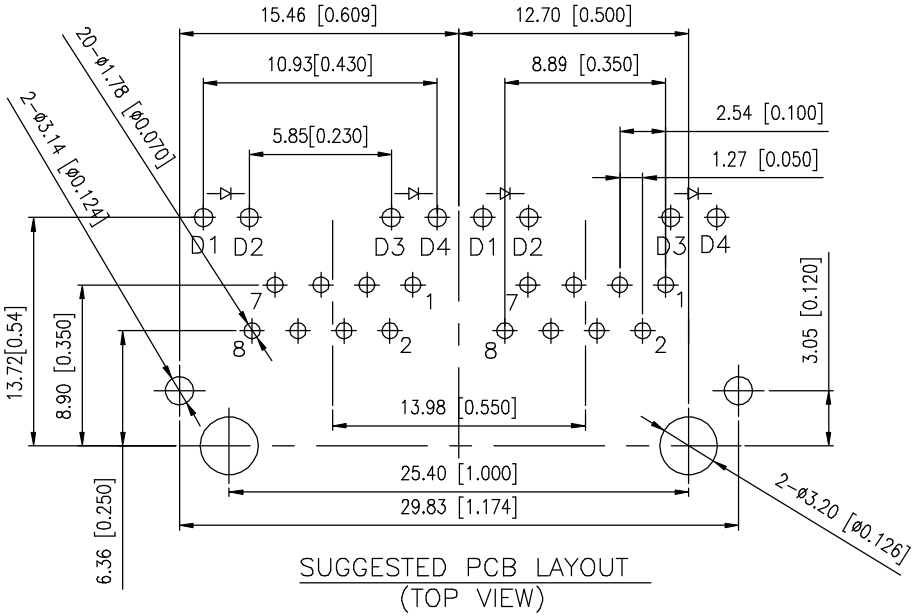

SUGGESTED PCB LAYOUT
(TOP VIEW)

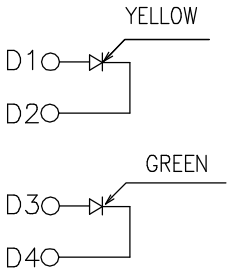

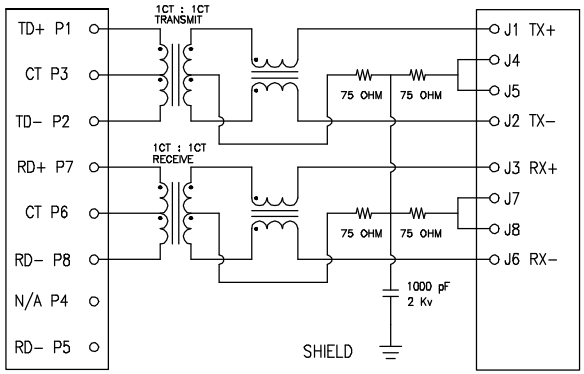

CMR:1-100MHZ -35.0dB MIN
Hi-Pot: 1500v AC 6S 1mA
OCL:350uH MIN @ 100KHZ 100mV 8mA DC
Turn Ratio: 1CT:1CT+/-3% Housing Material: PBT Black
Operating temperature range:0°C to +70°C

Contacts: 0.35mm thick phos bronze plated with 6u' gold in contact area

Product Drawing
DongGuan HeLing Electronic Co.,LTD

UNLESS OTHERWISE SPECIFED TOLERANCES	SCALE:1/1	UNIT: mm		DWG.NO:
	SIZE: A3	PAGE:1 OF 1	REV:A	HL-TR-001
UNIT: mm .XX :±0.25 .XXX :±0.13	APPROVED BY	CHECKED BY	PREPARED BY	
	Tony	Bill	Kelly	
	CUSTOMER COPY			