SPECIFICATIONS
Rated Current:3.0AMP
Contact Resistance:20mΩ Max
Withstand Voltage:1000V AC/DC
Insulation Resistance:1000MΩ Min
Operation Temperature:−40°c to +105°c

Contact Material:Phosphor Bronze
Contact Plating:Au or Sn Over Ni
Insulator Material:Polyester(UL94V−0)
Standard: PPS

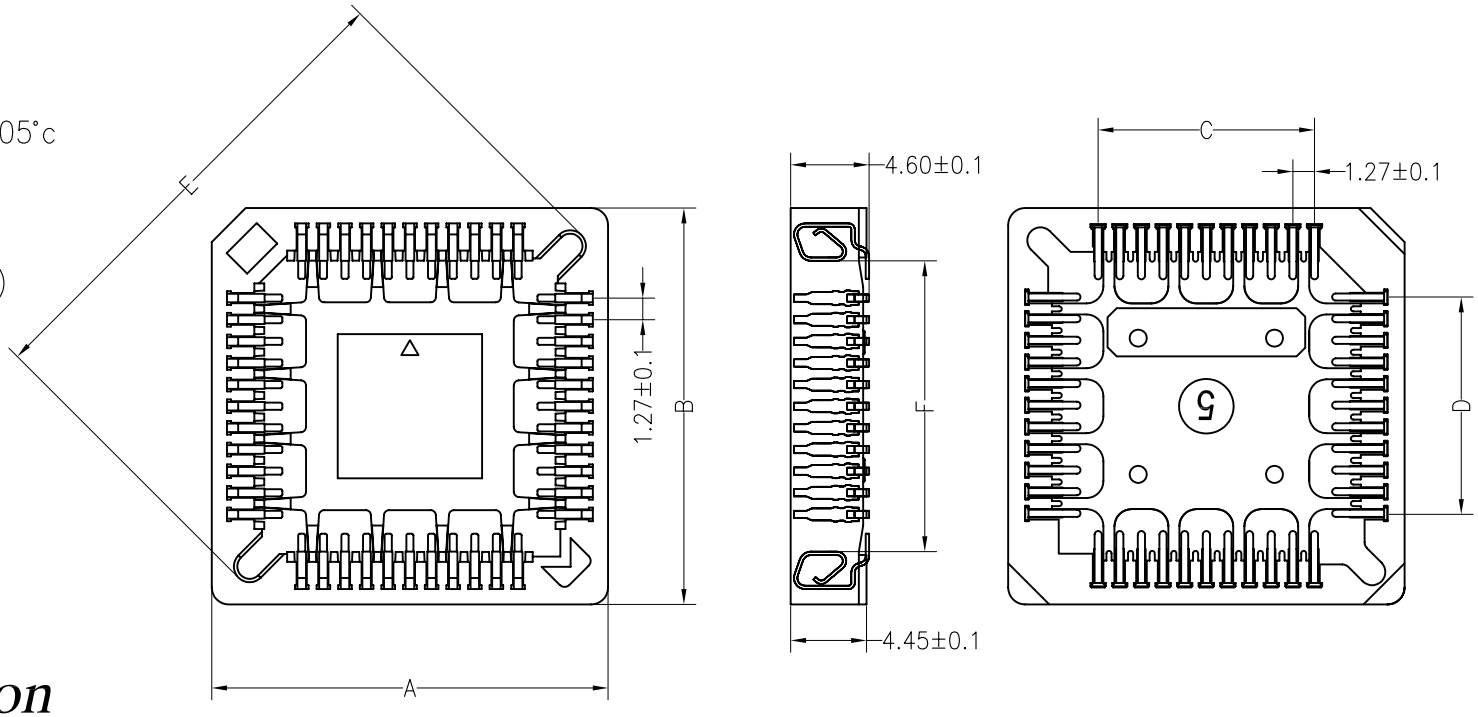

Ordering Information

7310 XX M SN X 01

- XX: No.of Pins 20~84P
- SN: Contact Plating
  - G0:Gold Flash
  - G2:5U" Gold
  - G3:10U" Gold
  - G4:15U" Gold
  - G5:30U" Gold
  - S0:Gold Flash/Tin
  - SN:Tin
- X: Color Type
  - A=Brown
  - B=Black

规格名称	A±0.2	B±0.2	C±0.2	D±0.2	E±0.2	F±0.2
SMT−20P	15.65	15.65	5.08	5.08	17.28	9.36
SMT−28P	18.19	18.19	7.62	7.62	20.87	12.00
SMT−32P	18.15	20.65	7.62	10.16	22.50	14.40
SMT−44P	23.27	23.27	12.70	12.70	28.30	16.99
SMT−52P	25.81	25.81	15.24	15.24	31.65	19.54
SMT−68P	30.89	30.89	20.32	20.32	38.83	24.62
SMT−84P	35.97	35.97	25.40	25.40	46.00	29.70

REV	DATE	MODIFICATION DESCRIPTION	CHANGE
A0	2012.04.11	NEW DRAWING	

OPERATION	
X.X	±0.30
X.XX	±0.20
X.XXX	±0.10
Angle	±3°
DIM	TOL

DRAW	YiYuSheng	12.04.11
CHECK		
APPROVE		

SCALE	FIT
UNIT	mm
SIZE	A4
SHEET	1/1
PROJ.	

JiLN® 深圳市锦凌电子有限公司
SHENZHEN JINLING ELECTRONIC CO.,LTD
Tel：86-755-2997-5806/5802 Fax：86-755-2997-5992

PART NO.	7310XXMSNX01
TITLE:	2.54mm PLCC SMT Socket