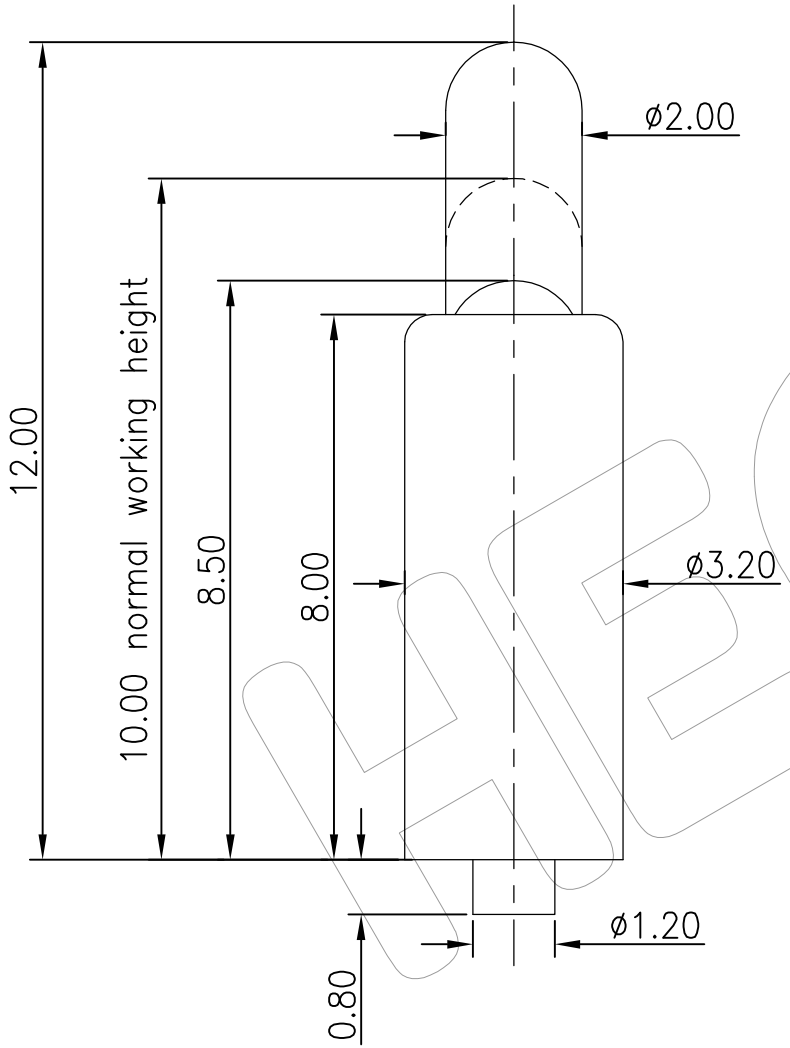

NOTE

1. Material
   Plunger: Brass 3604
   Barrel: Brass 3604
   Spring: SUS304
2. Plating
   Plunger: 10 micro-inch over 50~100 micro-inch nickel
   Barrel: 10 micro-inch over 50~100 micro-inch nickel
3. Electrical
   Rated current & voltage: 15.0A Max.
   Contact resistance: 30 mohm maximum at normal working height(quiescence)
4. Mechanical
   Spring force: 100g±20% at normal working height
   Durability: 10,000 cycles(minimum)
5. To ensure the best usage, please operate it based on the working height Based on the engineering drawings, shall not exceed the maximum allowed compression
6. To avoid arcing issue, The adaptor start to power supply after connector mated fully.
7. RoHS compliant product.

Ordering Information

HC - PG 320 1280 XX 0 01

- XX: Contact Plating
  - G0:Gold Flash
  - G1:3U" Gold
  - G2:5U" Gold
  - G3:10U" Gold
  - G4:15U" Gold
  - G5:30U" Gold
- 0: Packing
  - 0=PE Bag
  - A=Tray
  - T=Tube
  - R=Reel
- 01: Special

REV	DATE	MODIFICATION DESCRIPTION	CHANGE
A0		NEW DRAWING	

OPERATION	
X.X	±0.30
X.XX	±0.20
X.XXX	±0.10
Angle	±3°
DIM	TOL

DRAW	Ayang	
CHECK		
APPROVE		

SCALE	FIT
UNIT	mm
SIZE	A4
SHEET	1/1
PROJ.	

HECON 东莞市禾康电子有限公司
DONGGUAN HECON ELECTRONICS CO.,LTD
https: www.hecon-cable.com

PART NO.	HC-PG3201280XX001
TITLE:	ø3.2xL12.8mm Pogo Pin