All Pages Of This Edition Approved			
Signature:		Date:	

REV.	DESCRIPTION	REVISER	DATE
A0	New Release	Liu Gong	2018-9-7

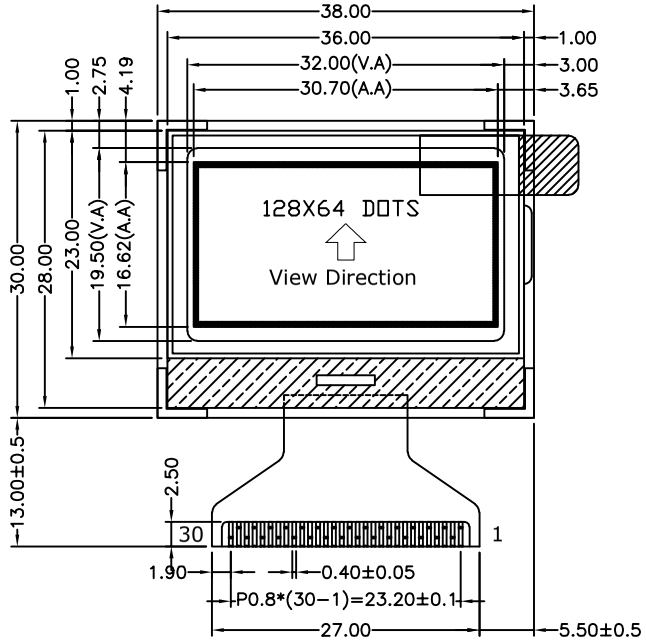

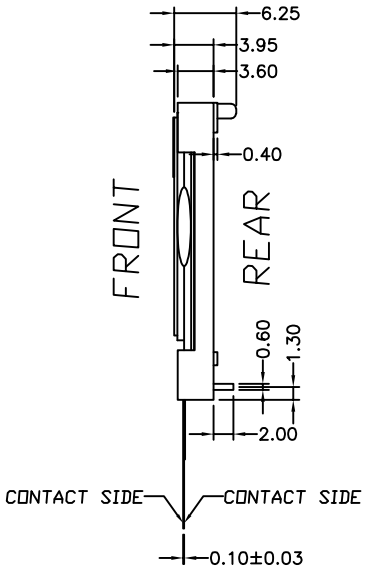

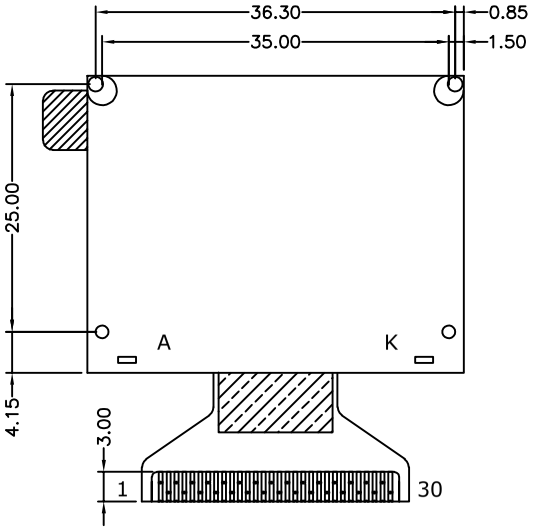

PIN	SYMBOL
1	NC
2	CSB
3	RSTB
4	A0
5	RWR
6	ERD
7	DB0
8	DB1
9	DB2
10	DB3
11	DB4
12	DB5
13	DB6
14	DB7
15	VDD
16	VSS
17	VOUT
18	C3P
19	C1N
20	C1P
21	C2P
22	C2N
23	V4
24	V3
25	V2
26	V1
27	V0
28	C86
29	P/S
30	NC

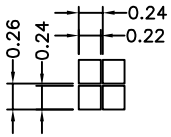

DOTS SIZE
(10:1)

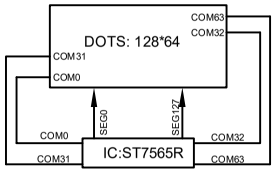

LCD LAYOUT

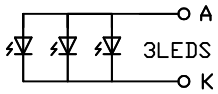

BackLight Circuit

Specifications:

1. Display Mode: FSTN/Positive/Transflective.
2. Viewing Angle: 6 O'clock.
3. Drive Method: 1/65Duty, 1/9Bias, Vlcd=8.8±0.2V, VDD=3.3V.
4. Backlight Type: White, 3.0±0.2V, 45mA, 3pcs.
5. Operating Temp: -20°C~+70°C.
6. Storage Temp: -30°C~+80°C.
7. Connector: COG+FPC
8. Drive IC: ST7565R(COG)
9. Customer P/N: --
10. Unmarked Tolerance: ±0.2mm
11. Requirements On Environmentall Protection: RoHS

深圳市佳显电子技术有限公司

	NAME:	DATE:	MODEL NUMBER :		SHEET:	1 OF 1
DESIGN BY:	Liu Gong	2018-9-7	SJXD12864-1743			
CHECKED BY:					NAME:	LCM
APPROVED BY:			DEFAULT UNITS: mm	PROJECTION		