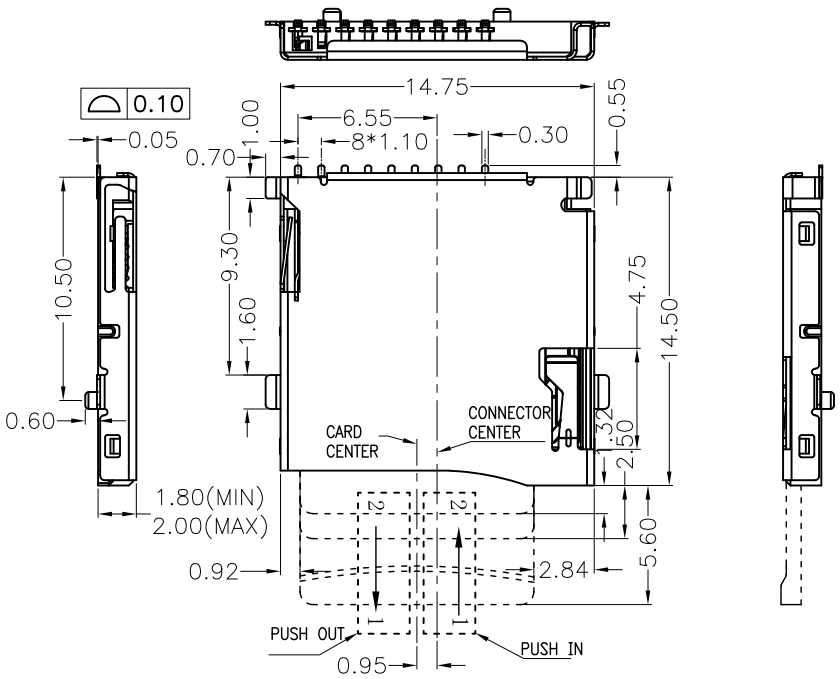

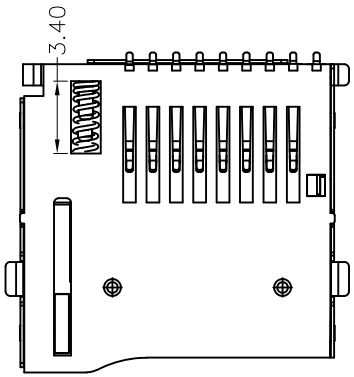

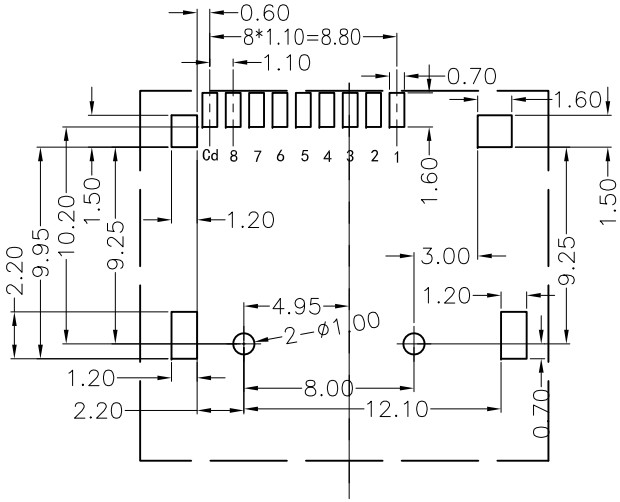

RECOMMENDED P.C.B HOLE LAYOUT

COMPONENT SIDE VIEW(TOLERANCE:+/-0.05)

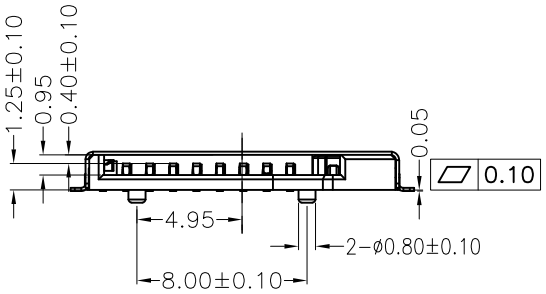

NOTES:

1.MATERIAL:

HOUSING: HIGH TEMPERATURE THERMOPLASTIC UL94V_0,COLOR:BLACK.

CONTACT: COPPER ALLOYS.

Shell: Stainless steel.

2.PLATING:

UNDERPLATE: NICKEL.

CONTACT AREA: GOLD OVER NICKEL.

SOLDER AREA: TIN OVER NICKEL.

3.MULTIMEDIA CARD COMPATIBLE

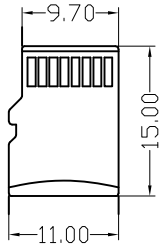

T-Flash

IN NO.	NAME	YTPE	DESCRIPTION
1	DAT2	I/O/PP	DATE LINE(BIT2)
2	CD/DAT3	I/O/PP	CARD DETECT DATE LIN(BIT3)
3	CMD	PP	COMMAND RESPONSE
4	VDD	S	SUPPLY VOLTAGE
5	CLX	I	CLOCK
6	VSS	S	SUPPLY VOLTAGE GROUND
7	DAT0	I/O/PP	DATE LINE(BIT0)
8	DAT1	I/O/PP	DATE LINE(DIT1)

REV	DESCRIPTION	DATE
A	初版发行	2017/07/07

X. ± 0.30	APPD:	深圳市创勤科技有限公司 SHENZHEN CHUANGQIN TECHNOLOGY CO.,LTD.	
.X ± 0.25			
.XX ± 0.20	CHKD:		
.XXX±			
X° ± 1°	DR: LIN YUN	TITLE: TF外焊 PUSH	
.X° ± 0.5°			
	UNITS: mm	SCALE: 1:1	DWG NO:	SHEET:1OF1 REV: A