惠州宏利源电器有限公司

Honyone（HUI ZHOU）ELECTRICAL APPLIANCE CO.,LTD

PB86

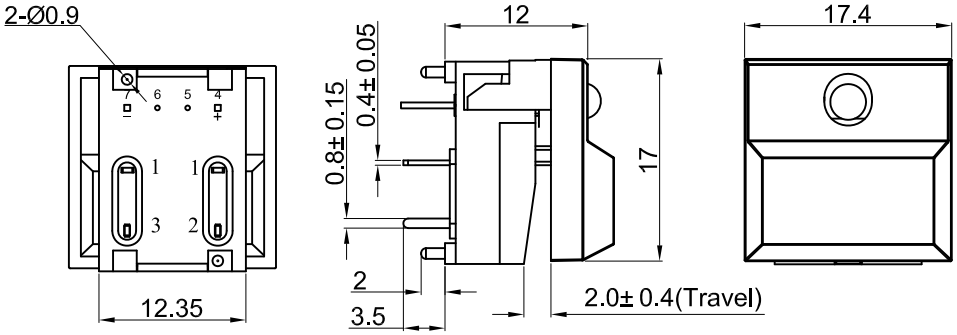

Specifications

Circuit	:SPDT
Current rating	:12mA
Voltage rating	:24VDC
Dielectric withstanding voltage	:250VAC for 1 minute
Contact resistance	:50mΩ Max. (Initial)
Insulation resistance	:100MΩ Min.
Operating force	:170± 50gf
Total travel	:2.0mm± 0.4mm
Mechanical life	:Over 50,000 cycles
Electrical life	:Over 10,000 cycles
Function	:Momentary
Operating temperature	:-20° C ~ +70° C

MATERIAL

Base:PA66, UL rated: 94V-0 Min.;

Cap: ABS;

Terminal: Phosphor bronze, Golden plated.

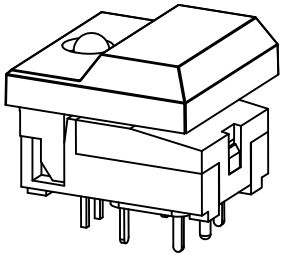

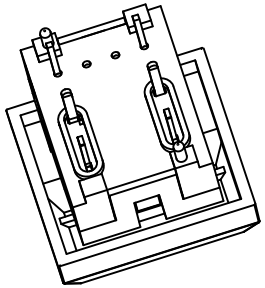

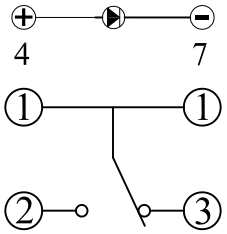

Circuit Diagram

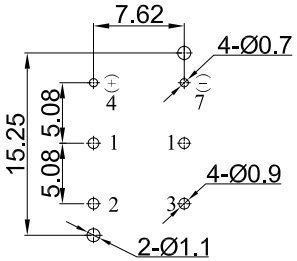

P.C.B . Layout

Note:

1.This product is strictly prohibited wave soldering and reflow soldering,please use the manual welding processing, temperature of 350° ±5° and time is 3± 0.5 seconds;

2.After the product is welded on the PCB board,it is prohibited to use any solvent to clean the PCB board,and avoid the influence of the inner product.

		LED SPECIFICATIONS					
O	Orange 橘色						
Y	Yellow 黄色	RG	红绿双色 黄绿色	1.8	2.0	2.4	20
W	White 白色	RG	红绿双色 红色	1.8	2.0	2.4	20
U	Blue 蓝色	W	白色	2.8	3.0	3.6	20
R	Red 红色	U	蓝色	2.8	3.0	3.6	20
G	Green 绿色	G	黄绿色	1.8	2.0	2.4	20
B	Black 黑色	O	橙色	1.8	2.0	2.4	20
A	Gray 灰色	R	红色	1.8	2.0	2.4	20
上盖颜色(X) Cap Color (X)		灯发光颜色(Q) Emitted color(Q)		最小	一般	最大	最大操作电流 (mA)
		顺向电压(V)					

				公差 TOLEANCES	≥30(±0.5)	5~30(± 0.3)	≤5(±0.2)	角度 ANGLE ± 5°		单位 DIMENSION UNIT	mm.
				视角 VIEWING ANGLE		比例尺 SCALE	NONE	日期 DATE	2023.05.29	品名 TITLE	图号 DRAWING NO
A1	规格参数更新	2023.05.29	N/A							PB86-B1-A-NG-70	PB86-B1-A-NG-70_CP_A1
A0	New Issue	2016.02.20	N/A	核准 APPROVED BY	Richard	核对 CHECKED BY	Sinc	绘图 DRAWN BY	Shaofei Ma		
版本 VER.	变更说明 CHANGE DESCRIPTION	日期 DATE	ECN NO.								

File Code: HY-WI-E-03A