REV.	ECN NO.	DATE	SIGN	DESCRIPTION
A	Initial Release	2024/06/28	Ann	Change Rev.01 To Rev.A

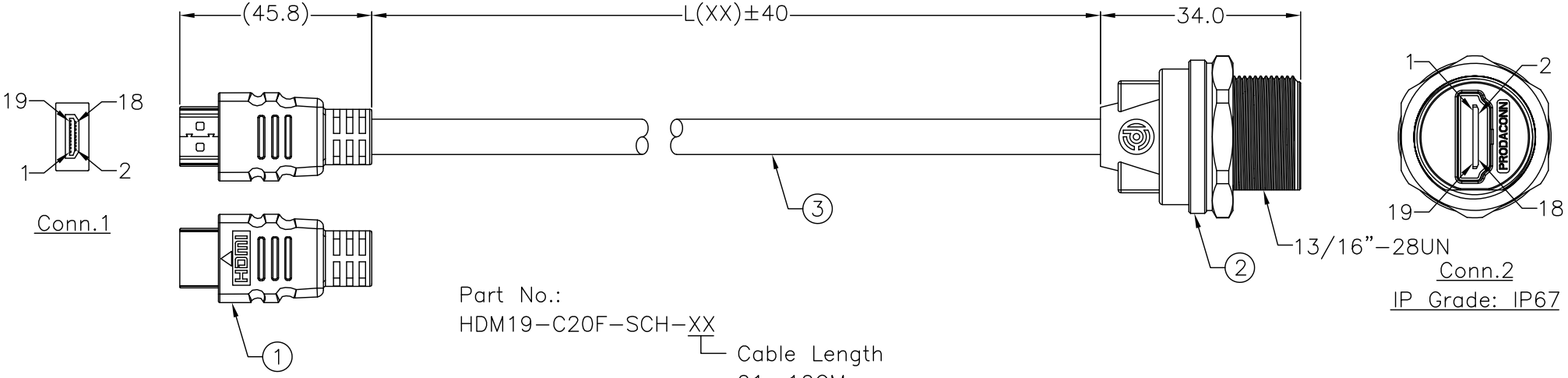

Part No.:
HDM19-C20F-SCH-XX
└ Cable Length
01: 10CM
02: 20CM
03: 30CM
04: 40CM
05: 50CM

Note:

1* Conn.1: HDMI Plug,19Pin
2* Conn.2: HDMI Jack,19Pin
Shielding: Zinc Alloy,Nickel Plated
Gasket: Silicone,Grey Black
Screw Nut: Copper Alloy,Nickel Plated
3* Cable: HDMI1.4V (1/0.254BCxFMPEø0.7x1P+D1/0.254BC+A+M)5C+1/0.254B+HDPEø0.6x4C+A+D,1/0.254BC+B16/4/0.12AM+1/0.254B+HDPEø0.6x4C+A+D,1/0.254BC+B16/4/0.12AM PVC Jacket,OD6.0,Black

Conn.1	Wire Color		Conn.2	
19	Yellow	黃	19	
17	Drain	地線	17	Twist
14	White	白	14	
12	Brown	棕	12	
8	Drain	地線	8	Twist
10	White	白	10	
9	Blue	藍	9	
11	Drain	地線	11	Twist
7	White	白	7	
6	Green	綠	6	
2	Drain	地線	2	Twist
4	White	白	4	
3	Red	紅	3	
5	Drain	地線	5	Twist
1	White	白	1	

Pin Out

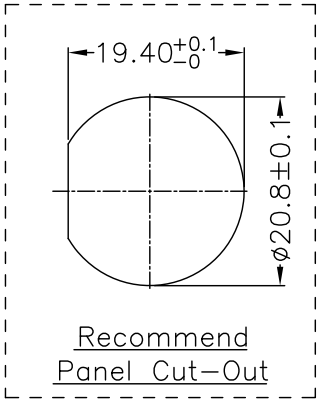

Recommend
Panel Cut-Out

Conn.1	Wire Color		Conn.2
Shield	Braid	編織	Shield
18	Red	紅	18
16	Orange	橘	16
15	Yellow	黃	15
13	White	白	13

柏達康科技有限公司
Prodaconn
2024/06/28
ISSUSED

All dimension in mm

PRODACONN

TOLERANCE UNLESS OTHERWISE SPECIFIED	REV.	SCALE
±0.5	A	Free

DRAWN BY	APPROVED BY	DATE(Y/M/D)	PAGE	SIZE
Ann	Roy	2024/06/28	1/1	A4

PART NO: HDM19-C20F-SCH-XX

TITLE: WATERPROOF HDMI JACK,HDMI PLUG

CUSTOMER NO:

THIS DOCUMENT IS CONFIDENTIAL AND A PROPERTY OF PRODACONN DISCLOSURE TO THIRD PARTY HAS TO BE AUTHORIZED BY PRODACONN