SPECIFICATIONS
Rated Current:3.0AMP
Contact Resistance:20mΩ Max
Withstand Voltage:1000V AC/DC
Insulation Resistance:1000MΩ Min
Operation Temperature:−40°c to +105°c

Contact Material:Brass
Contact Plating:Au or Sn Over Ni
Insulator Material:Polyester(UL94V−0)
Standard: PA46
Max.Processing Temp: 180°C for 30−60 seconds
(200°C for 10 seconds)

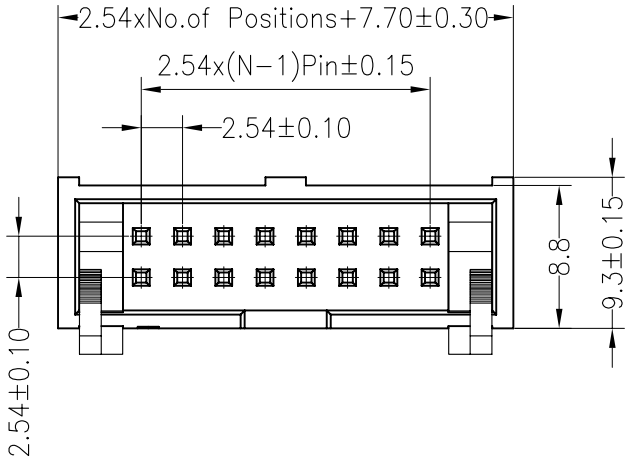

Recommended P.C.B Layout(Top Side)
(PCB BOARD TOLERANCE±0.05)

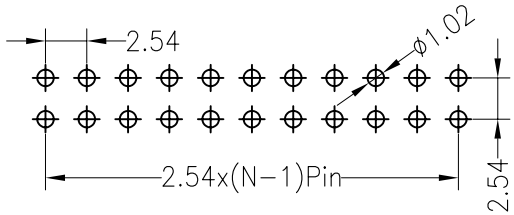

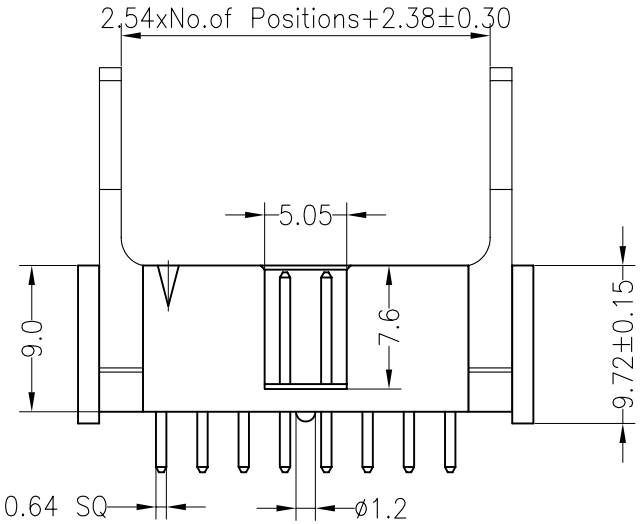

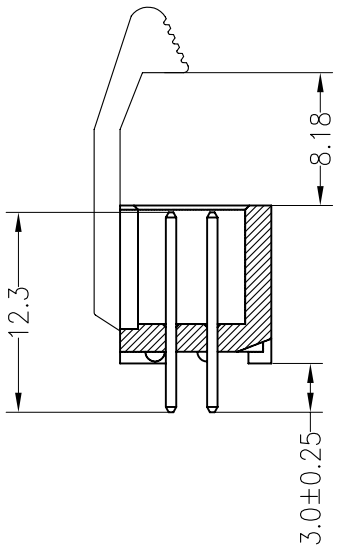

Ordering Information

3214- XX S XX X B K00 01

- No.of Pins: 8--64
- Contact Plating:
  - G0:Gold Flash
  - G1:3U" Gold
  - G2:5U" Gold
  - G3:10U" Gold
  - G4:15U" Gold
  - G5:30U" Gold
  - S0:Gold Flash/Tin
  - SN:Tin
- Insulator Material Option:
  - A=BK-PBT
  - B=BK-PA66
  - C=BK-PA6T
  - D=BK-PA46
  - E=BK-PA9T
  - F=BK-LCP

REV	DATE	MODIFICATION DESCRIPTION	CHANGE
A0	2014.05.26	NEW DRAWING	

OPERATION	
X.X	±0.30
X.XX	±0.20
X.XXX	±0.10
Angle	±3°
DIM	TOL

DRAW	YiYuSheng	14.05.26
CHECK		
APPROVE		

SCALE	FIT
UNIT	mm
SIZE	A4
SHEET	1/1
PROJ.	

JiLN® 深圳市锦凌电子有限公司
SHENZHEN JINLING ELECTRONIC CO.,LTD
Tel：86-755-2997-5806/5802 Fax：86-755-2997-5992

PART NO.	3214−XXSXXXBK0001
TITLE:	2.54mm 带金属钩简牛 180°