ABIDE BY WEEE & ROHS

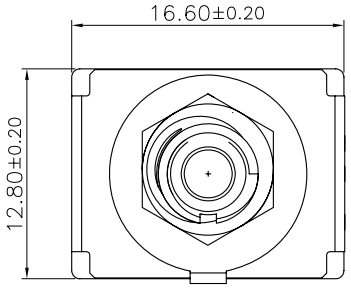

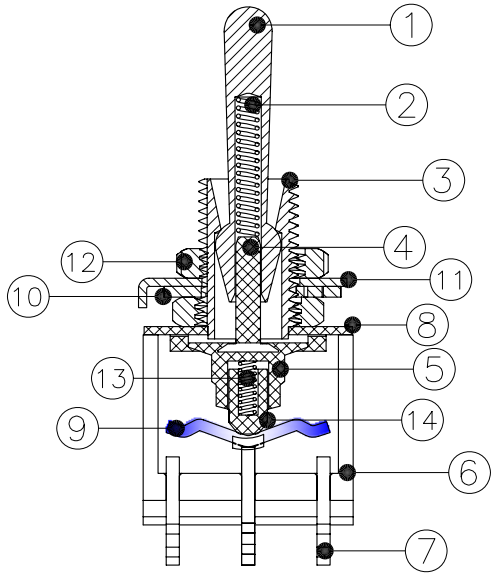

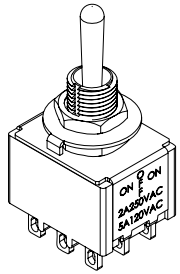

SCALE 1:1

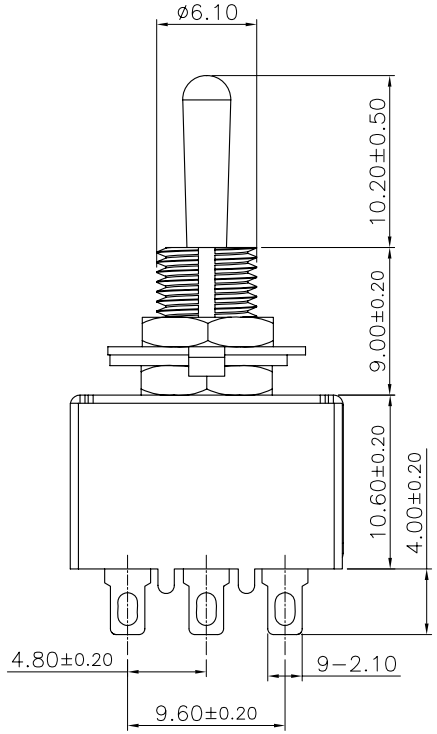

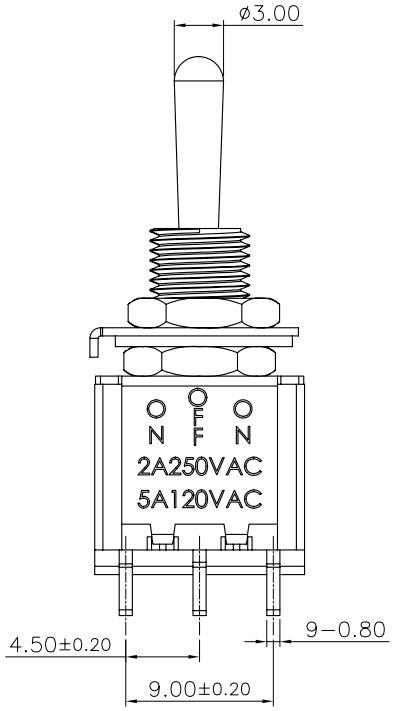

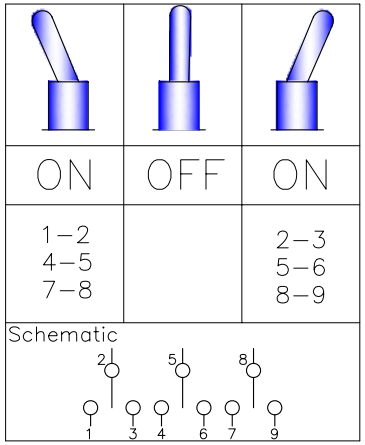

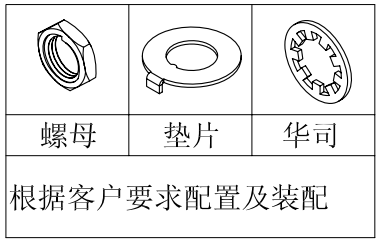

根据客户要求配置及装配

ITEM	PART NAME	TER'NO.	QTY.	MATERIAL	FINISHING	REMARK
⑭	Sliding axle	———	3PCS	PBT	White	———
⑬	Spring	———	3PCS	Steel	———	———
⑫	Nut	———	2PCS	Brass	Plating Nickel	———
⑪	Locking Ring	———	1PCS	Brass	Plating Nickel	———
⑩	Washer	———	1PCS	Stainless steel		———
⑨	Movable contactor	———	3PCS	Brass	Plating Silver	———
⑧	Shell	———	1PCS	Stainless	steel	———
⑦	Terminal	———	9PCS	Brass	Plating Silver	———
⑥	Base	———	1PCS	PBT	Red	———
⑤	Sliding axle	———	1PCS	PBT	Black	———
④	Copper Crossbar	———	1PCS	Brass	———	———
③	Bushing	———	1PCS	Brass	Plating Nickel	———
②	Spring	———	1PCS	Steel	———	———
①	Toggle	———	1PCS	Brass	Plating Nickel	———

ECN NO.	REV.	DATE.	DESCRIPTION.	CHANGE.	CHECK.	APPRO.
———	A	11-08-06'	NEW	———	———	———

APPROVALS		DATE
DRAWN	Dong xinwei	11-08-06'
CHECKED	Lv panhong	11-08-06'
APPROVALS	Lv panhong	11-08-06'

东莞市凯华电子有限公司
KAIHUA ELECTRONICS CO.,LTD

TITLE: 9P3T Toggle Switch

PART NO. TG161204W01

TOLERANCES ARE			ANGLE
	30~	±0.30	±2°
	10~30	±0.20	
	5~10	±0.15	
	~ 5	±0.10	

UNIT: mm | SCALE: 2:1 | PROJ:

DRAWING NO. 061108-01 | SHEET 1 OF 1