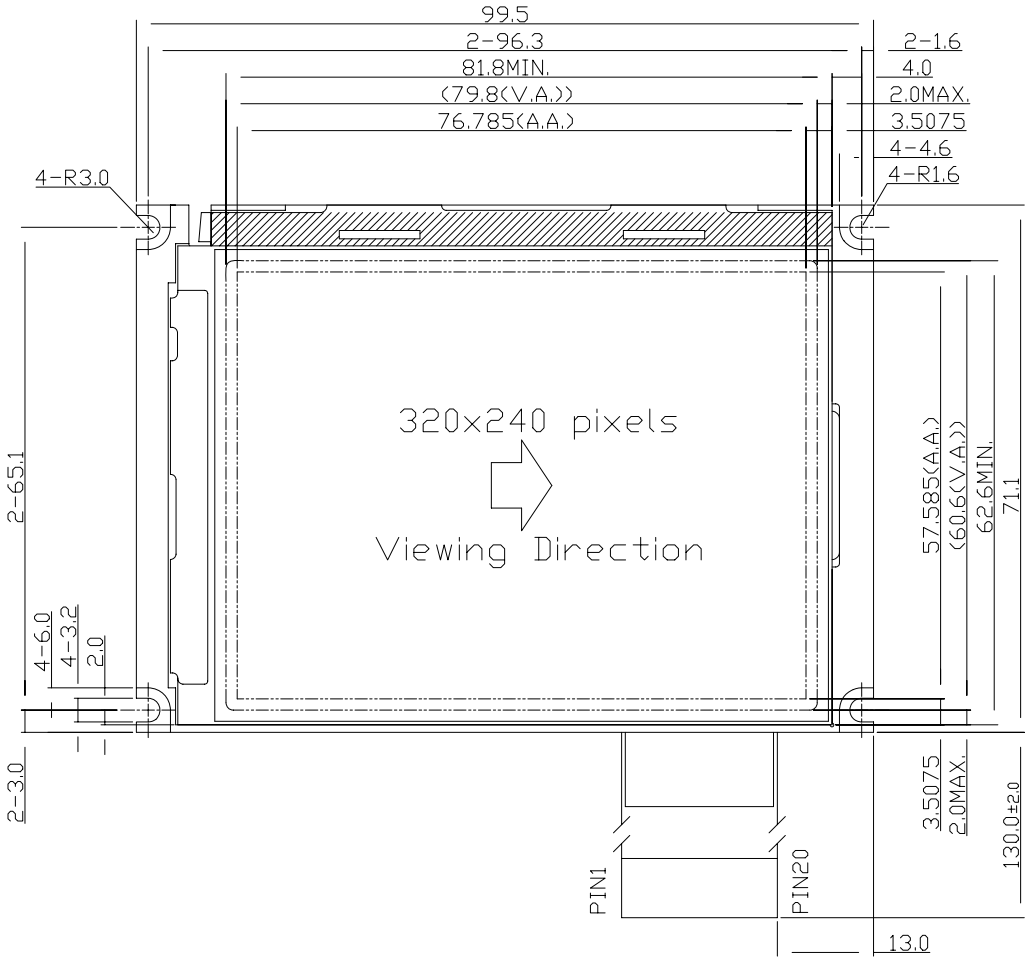

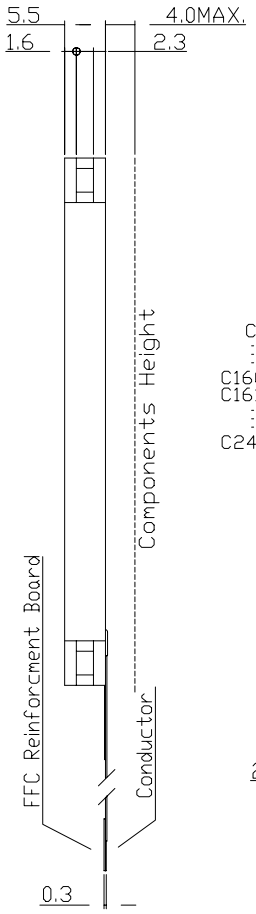

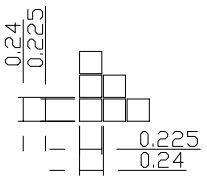

Pixels Details
Scale=20/1

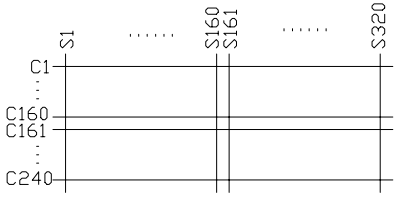

Wiring Details(Top View)
Scale=free

Terminal	
No.	Pin Name
1	VSS
2	VDD
3	V0
4	/WR
5	/RD
6	/CS
7	RS
8	/RST
9	DB0
10	DB1
11	DB2
12	DB3
13	DB4
14	DB5
15	DB6
16	DB7
17	BUSY
18	VOUT
19	BLA
20	BLK

(*9)

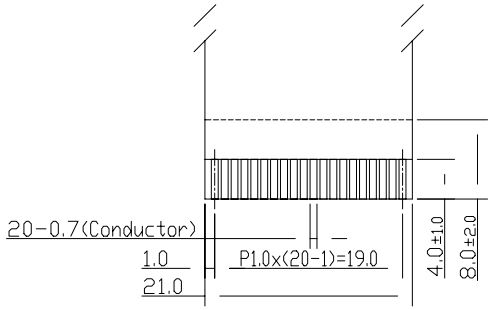

FFC Terminal Details
(Conductor Side)
Scale=2/1

Note:
*1. Display Type : FSTN, Positive, Transflective
*2. Viewing Direction : 9H
*3. Duty : 1/240, Bias : 1/12
*4. Backlight Color : White
*5. Operating Voltage : 5.0V
*6. Operating Temperature : -10°C~60°C
*7. Storage Temperature : -20°C~70°C
*8. Driver IC : RA8803
*9. An external VR(25K to 50K) must be connected for Contrast Control
*10. Environmental Safe Standard : RoHS

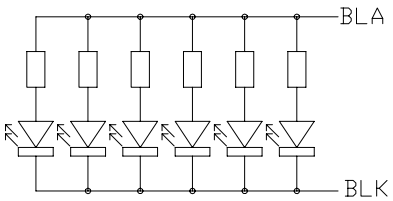

Backlight Circuit
(No. of LEDs = 6pcs)
Scale=free

Rev	Note	Date
C		
B	-Revise Operating Voltage	Lin Yan 2006-07-31
A	-Revise Outline	Li Shuai 2006-05-18

Dwg Title: ATG320240A Outline Dwg

Dwg No.: | Date: 2006-04-18

Scale	Tol.	Unit	Paper Size
3/2	±0.5	mm	A3

Approved | Checked | Drawn: DAVID LU

ARROW TECH