SODIUM-ION RECHARGEABLE STARTING BATTERY

MODEL: NaCRYB20





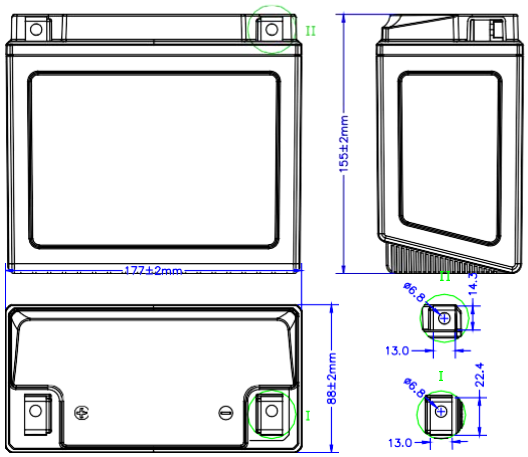

PARAMETER

Volts	12V		
Rated Capacity	14.0Ah(10 hours rate)		
Charging cut-off voltage	15V		
Starts	≥80000times		
Power(25°C)	10 hours rate		168Wh
Appx.Dimension	Length	177±2mm(6.96inch)	
	Width	88±2mm(3.46inch)	
	Height	155±2mm(6.10inch)	
Weight	2.50±5%Kg(5.51pound)		
Using ambient temperature	Charge Temperature 0°C~55°C(32°F~131°F)		
	Discharge temperature -40°C~66°C(-40°F~140°F)		
Starting ability	Ambient temperature 25°C(77°F),Pulse discharge time ≤5 seconds		490A
	Ambient temperature -18°C(-0.4°F),Pulse discharge time ≤5 seconds		280A
Self discharge	Approximately 1.5%, Every month, 25°C(77°F)		
Charging method	Constant current and constant voltage charging		Temperature 25°C(77°F)
	Standard charge current:0.5C		
	Maximum charging current:3C		
	Charging Voltage:15V		
Replace lead-acid battery type	YT20-4 YT20L-4 GYZ20L GYZ20H GYZ20H-A YTX20-BS YTX20L-BS GYZ20H-B GYZ20H-C YTX20H YTX20H-BS YTX20H-BS YTX20 YTX20L		

1.Ultra-strong starting performance

Support up to 35C pulse discharge at room temperature, Quick and reliable starting in -25℃ low temperature environment.

2.Excellent safety protection

The first internal protection device of the battery core electively prevents thermal runaway and ensures the usage safety.

3.Long shelf-life time

Full charge lasts for 18 months without recharging.

4.Ultra-long life

Starting times ≥ 80,000 times.

5.Super over-discharge resistance

Extreme over-discharge to 0 volts, no damage to the battery.

6.Extremely fast charging

3 minutes to meet the starting needs under the deficit state.

7.360° fexible installation

No risk of leakage, easily mounted in any direction.

BATTERY STORAGE ENVIRONMENT

Suggested storage temperature	1 month	-20~45°C(-4°F~113°F)
	3 months	0~45°C(32°F~113°F)
	1 year	0~25°C(32°F~77°F)

TEMPERATURE AND CAPACITY(0.2C)

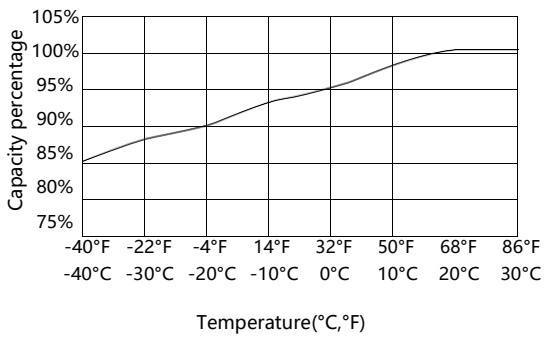

CHARGE DISCHARGE CURVE AND CHARGE DISCHARGE TIME 25℃(77°F)

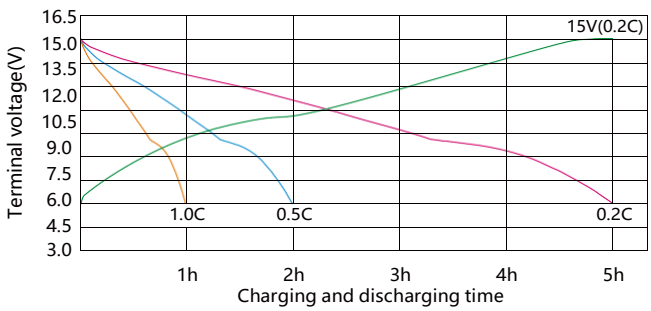

PRECAUTIONS

- ★ Store the cell in a cool, dry and well-ventilated area.
- ★ The above parameters are for reference only, the accurate parameters shall be based on the actual production order.
- ★ During usage, it is strictly prohibited to reverse the positive and negative terminals of the battery.
- ★ Please use a special charger for Sodium-ion batteries when charging.
- ★ If other types of 12V chargers are used, there may be a deviation in charging capacity.
- ★ Do not overcharge, otherwise, it may cause overheating and fire accident.

OUTDO CORP LIMITED
Tel:+86-596-8991888 Email:hw@huawei-battery.com
www.huawei-battery.com www.outdo.com