CN1:LCM Interface		CN2:Backlight Interface	
Pin NO.	Pin Name	Pin NO.	Pin Name
1	VSS	1	LED(+)
2	VCC	2	VCC
3	SDA	Backlight ON:Connect CN2-1,CN2-2	
4	SCL	Backlight OFF:Disconnect CN2-1,CN2-2	
Interface	IIC		

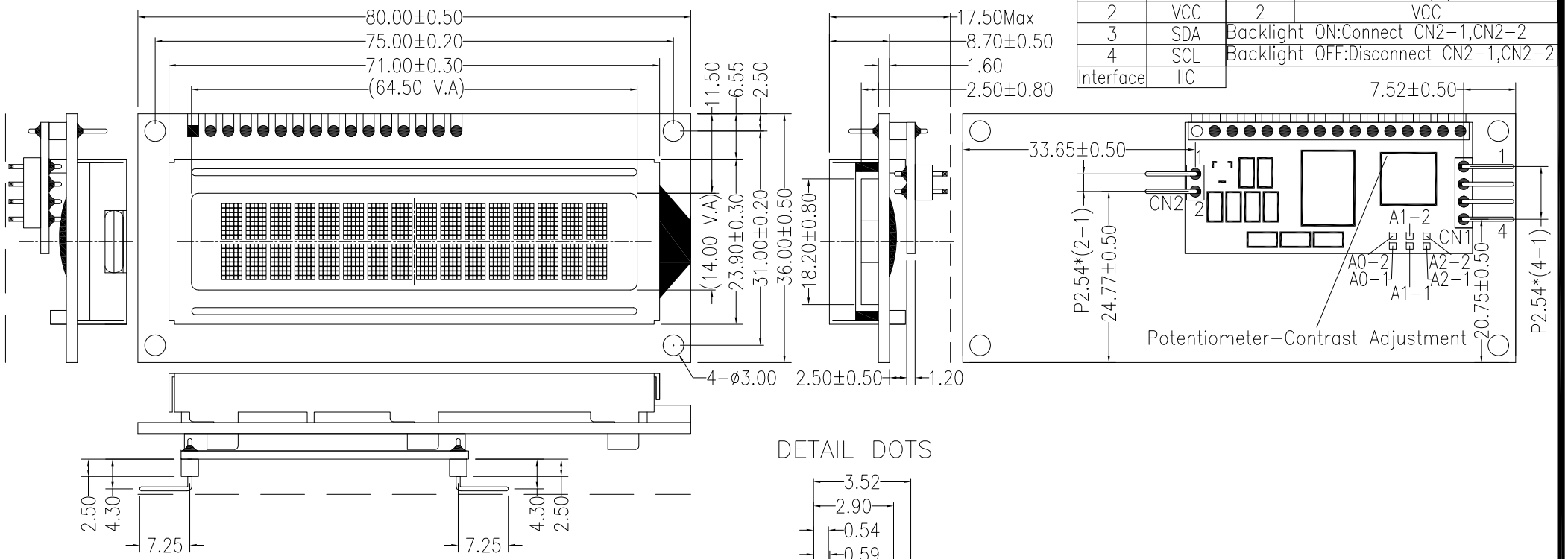

DETAIL DOTS

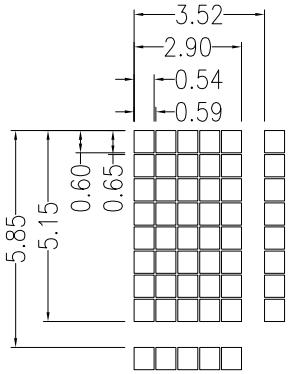

INPUTS			IIC BUS SLAVE ADDRESS
A2-1,A2-2	A1-1,A1-2	A0-1,A0-2	
Connect	Connect	Connect	0x20
Connect	Connect	Disconnect	0x21
Connect	Disconnect	Connect	0x22
Connect	Disconnect	Disconnect	0x23
Disconnect	Connect	Connect	0x24
Disconnect	Connect	Disconnect	0x25
Disconnect	Disconnect	Connect	0x26
Disconnect	Disconnect	Disconnect	0x27

SPECIFICATIONS:

1. DISPLAY TYPE:YELLOW-GREEN/STN
2. VIEWING DIRECTION:6:00 O'CLOCK
3. POLARIZER MODE:TRANSFLECTIVE/POSITIVE
4. DRIVE METHOD:1/16 DUTY,1/5 BIAS
5. OPERATING TEMP:-20°C---+70°C
6. STORAGE TEMP:-30°C---+80°C
7. WORKING VOLTAGE:VDD-VSS=+5.0VDC
8. BACKLIGHT:YELLOW-GREEN
9. ALL UNMARKED TOLERANCES:±0.20mm/±0.5°

版本 Ver.	标记 Mark	更改内容 Modify the content	更改人 Modified by	日期 Date
				20240809

版本 Ver.	标记 Mark	更改内容 Modify the content	更改人 Modified by	日期 Date

深圳市佳显电子技术有限公司
ShenZhen Goodview Electronic Technology Co.,Ltd

绘图 Drawn by:	李建清	绘图编号 Drawing NO.:	LCM-SJXD1602A-ZDYSYWN
单位 Unit:	mm		
审核 Checked by:		客户编号 Customer NO.:	
日期 Date:	2024-08-09		
批准 Approved by:		图纸版号 Drawing Version:	V1
页数 Sheet NO.:	1/1		