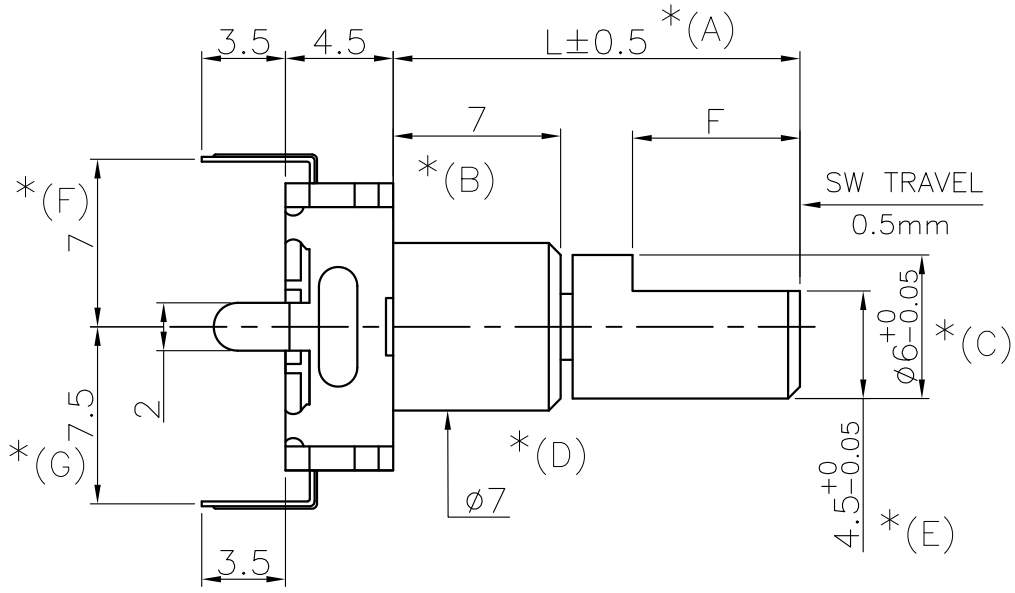

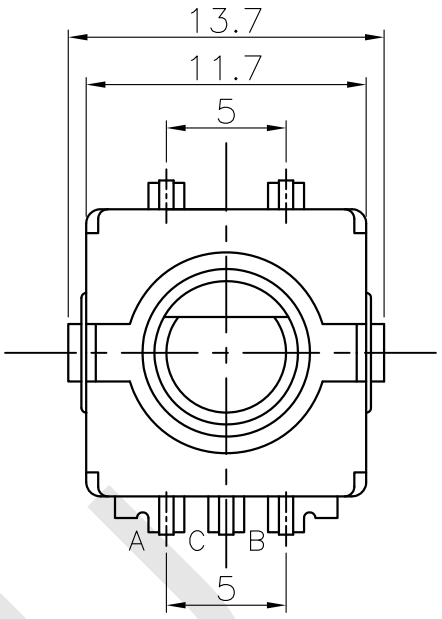

CIRCUIT

P.C.B MOUNTING HOLE

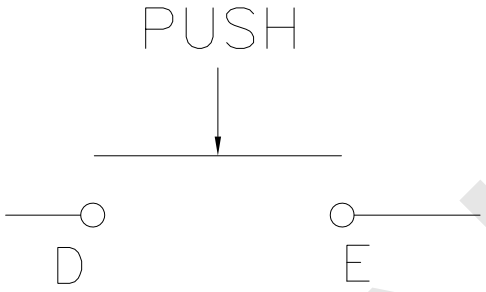

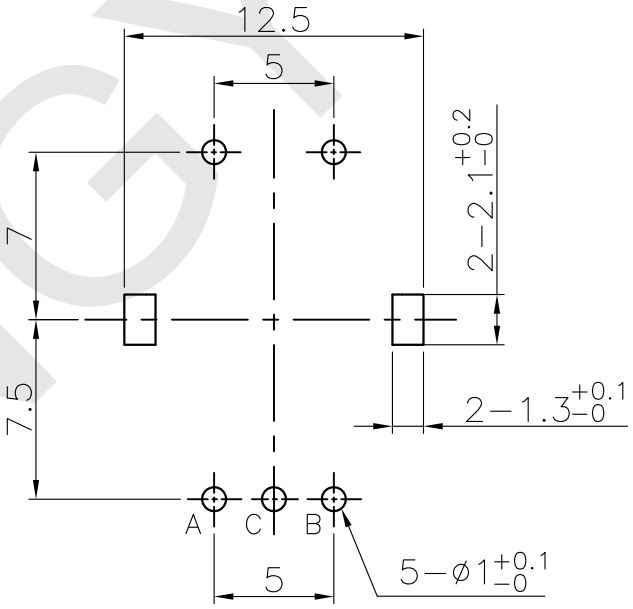

SW

			✓	
L	13	15	20	21
F	5	7	10	9

PRODUCR DETAILS:

1. RATING:DC 5V 10mA
2. CONTACT RESISTANCE:1Ω MAX.
3. INSULATION RESISTANCE:100 MΩ MIN(DC 250V).
4. WITHSTAND VOLTAGE:AC 300V/1 MINUTE.
5. OPERATING TEMPERATURE:-30° C~+80° C.
6. ROTATIONAL TORQUE:20~150gf.cm.
7. LIFE CYCLE:30000 CYCLES.

注：1.帶*號為重點尺寸。

HONGYU

	MODEL	HEC111S−40C3N−20F10					惠州市宏宇高科電子有限公司		
	DWG NO	TZ−EC11−B−104					Huizhou City HongYu High-Tech Electronics Co., Ltd.		
5				TOL. UNLESS OTHERWISE SPEC		SCALE	DRAW	CHKD	APPD
4				BASIC DIMENSIONS	TOL.	/			
3				<10	±0.3	UNIT	丘	黄	卓
2				10~100	±0.5	mm	2018.01.29	2018.01.29	2018.01.29
1				>100	±0.8	VERSION	志敏	力文	红雨
△	DATE	REVISION	DESIGN	ANGLE	±5°	A0			