CUSTOMER		DESCRIPTION	CURRENT TRANSFORMER

OUTLINE DIMENSION(UNIT:mm):

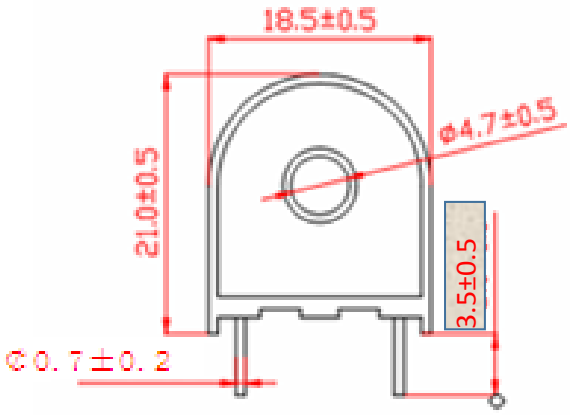

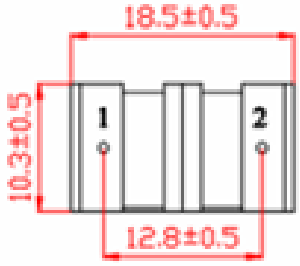

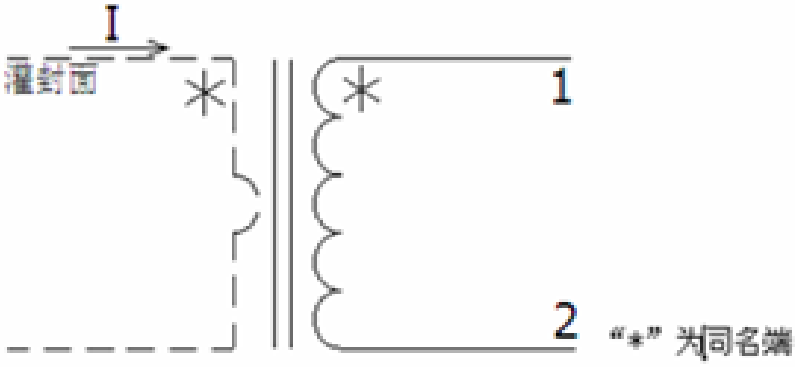

ELECTRICAL CHARACTERISTIC:

NO.	ITEM	MEASURED POINT	TECHNICAL DATA	REMARK
1	Normal Primary Current	B--A	5A	10A MAX
2	Normal Secondary current	1--2	5mA	
3	Accuracy	1--2	0.50%	
4	Primary/secondary ratio		1:1000	
5	Load Resistance		≦50Ω	
6	DC Resistance	1--2	95Ω MAX	at 25℃
7	Nominal working frequecncy		50-60Hz	
8	Operation Temperature		-40℃ to 50℃	
9	HI-POT	P-S	3000VAC 50Hz 1mA/60s	

BELTA SHENZHEN BELTA TECHNOLOGY CO.,LTD	DRAWN BY	CHECKED BY	VERIFIED BY	APPROVED BY	CUSTOMER P/N	CT04-5A/5mA
	王小川	张传芝	王爱琳	邱方	MODEL	CT10E-5A/5mA
					DATE	2020/6/11
					REV.NO.	A
					PAGE	3 of 3