ABIDE BY WEEE & ROHS

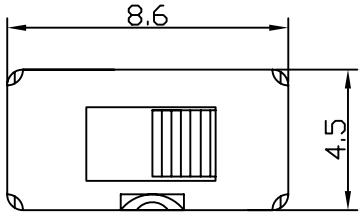

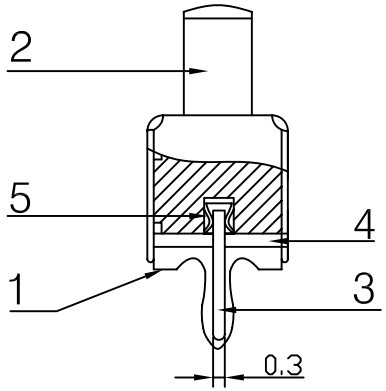

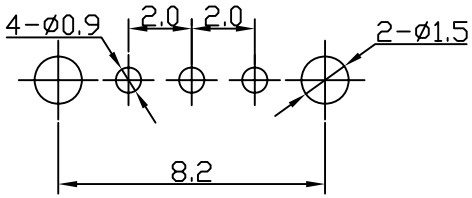

PCB Layout Recommended

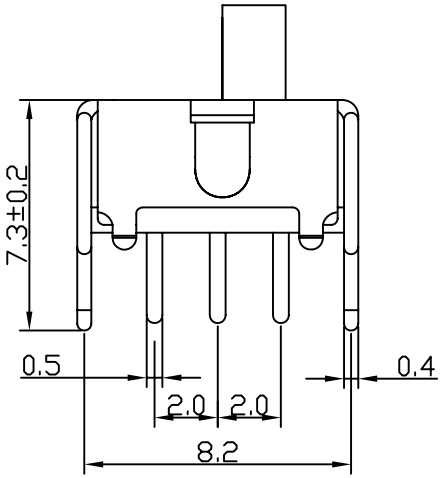

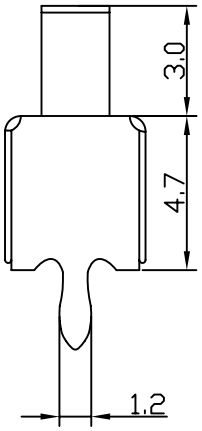

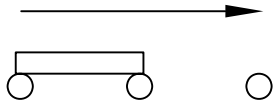

Circuit Diagram

ITEM	PART NAME	TER'NO.	QTY.	MATERIAL	FINISHING	REMARK
⑤	Contact	——	1PCS	Brass	Plating Silver	——
④	Base	——	1PCS	P.C.Board	——	——
③	Terminal	——	3PCS	Brass(T=0.30)	Plating Silver	——
②	Keystoke	——	1PCS	POM	Black	——
①	Shell	——	1PCS	Iron(T=0.35)	Plating Nickel	——

APPROVALS		DATE
DRAWN		
CHECKED		
APPROVALS		

Kaih

东莞市凯华电子有限公司
KAIHUA ELECTRONICS CO.,LTD

TITLE:	Sleek Switch
PART NO.	SL864709D01
UNIT: mm	SCALE: 4:1
DRAWING NO.	051220-01
	SHEET 1 OF 1

TOLERANCES ARE			ANGLE
	30~	±0.30	±2°
	10~30	±0.20	
	5~10	±0.15	
	~ 5	±0.10	

ECN NO.	REV.	DATE.	DESCRIPTION.	CHANGE.	CHECK.	APPRO.
——	A	05'/12/20	NEW	——	——	——