ABIDE BY ROHS

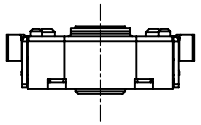

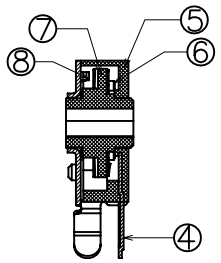

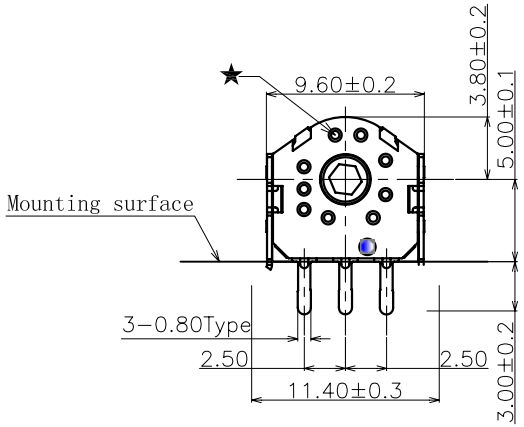

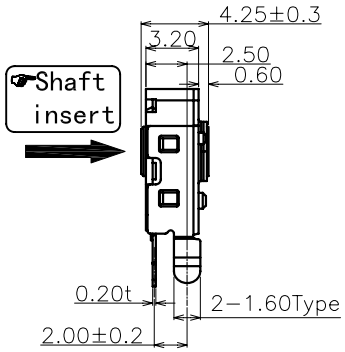

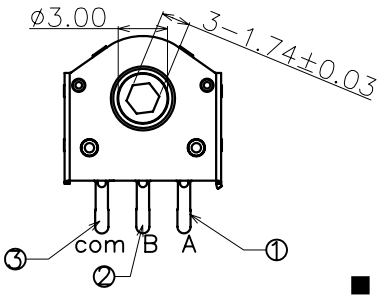

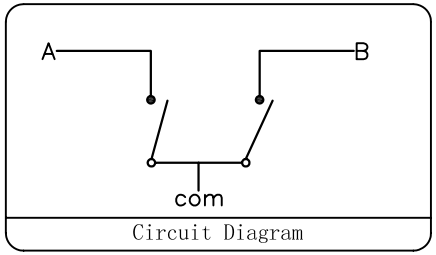

A:Output signal A
B:Output signal B

■ Specification :

- 1. Rated voltage: D.C.5V
- 2. Maximum operating current(resistive load) Each lead :1mA
- 3. Resolution: 12 pulses/360° for each phase
- 4. Contact Resistance: 5Ω(Max)
- 5. Insulation resistance: 50MΩ(Min) DC50V
- 6. Dielectric strength: AC50V(50-60Hz)for 1 minute
- 7. Detent torque: 15-30gf.cm
- 8. Life Test :300,000 Cycles(min)

Detail E(2:1)
Shaft hole shape and dimension

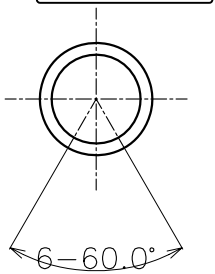

(Tolerance:±0.1)
(P.C.Bthickness t=1.0mm)

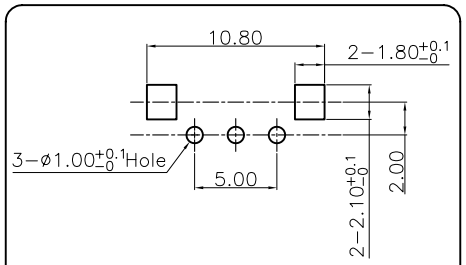

PCB Layout(Pattern Side)

备注：底座背面的压针孔★是根据产品模具成型要求而定的，其规格的大小与数量的多少对产品结构、功能及使用无任何影响。

ITEM	PART NAME	TER'NO.	QTY.	MATERIAL	FINISHING	REMARK
⑧	Fixed Plate	——	1	Stainless Steel	——	——
⑦	Revolving Wheel	——	1	POM	Red	UL 94HB
⑥	Contact	——	1	Phosphor bronze	——	——
⑤	Base	——	1	PA66	Black	UL 94HB
④	Shell	——	1	Iron	Plating Nickel	
③	Terminal	3	1	Brass(0.2t)	Plating Silver	——
②	Terminal	2	1	Brass(0.2t)	Plating Silver	——
①	Terminal	1	1	Brass(0.2t)	Plating Silver	——

APPROVALS		DATE
DRAWN	Zhang.HJ	2016.12.22
CHECKED		
APPROVALS		

Kailh 东莞市凯华电子有限公司 DONGGUAN CITY KAIHUA ELECTRONICS CO.,LTD

TITLE:	EN9850 B Type Encoder
PART NO.	CEN985012R13
UNIT: mm	SCALE: 1:1
DRAWING NO.	——
SHEET 1 OF 1	PROJ:

TOLERANCES ARE			ANGLE
	30<L	±0.30	±2°
	10<L≦30	±0.20	
	5<L≦10	±0.15	
	L≦5	±0.10	

ECN NO.	REV.	DATE.	DESCRIPTION.	CHANGE.	CHECK.	APPRO.
——	A	——	NEW	——	——	——