| LCM结构图 | 客户型号: | | ESHX型号: | ESHX12832DF0017-A |
|---|---|---|---|---|
| 3rd ANGLE | UNIT:mm | SCALE 1:1 | PAGE:1/1 | APPROVED | CHECKED | DESIGNED Emily | DATE 2024.03.26 |

| VERSION | REVISION RECORD | DATE |
|---|---|---|
| A | FIRST ISSUE | 2024.03.26 |
| B | 按客户要求更改PIN长度原25mm为15mm | 2024.05.23 |

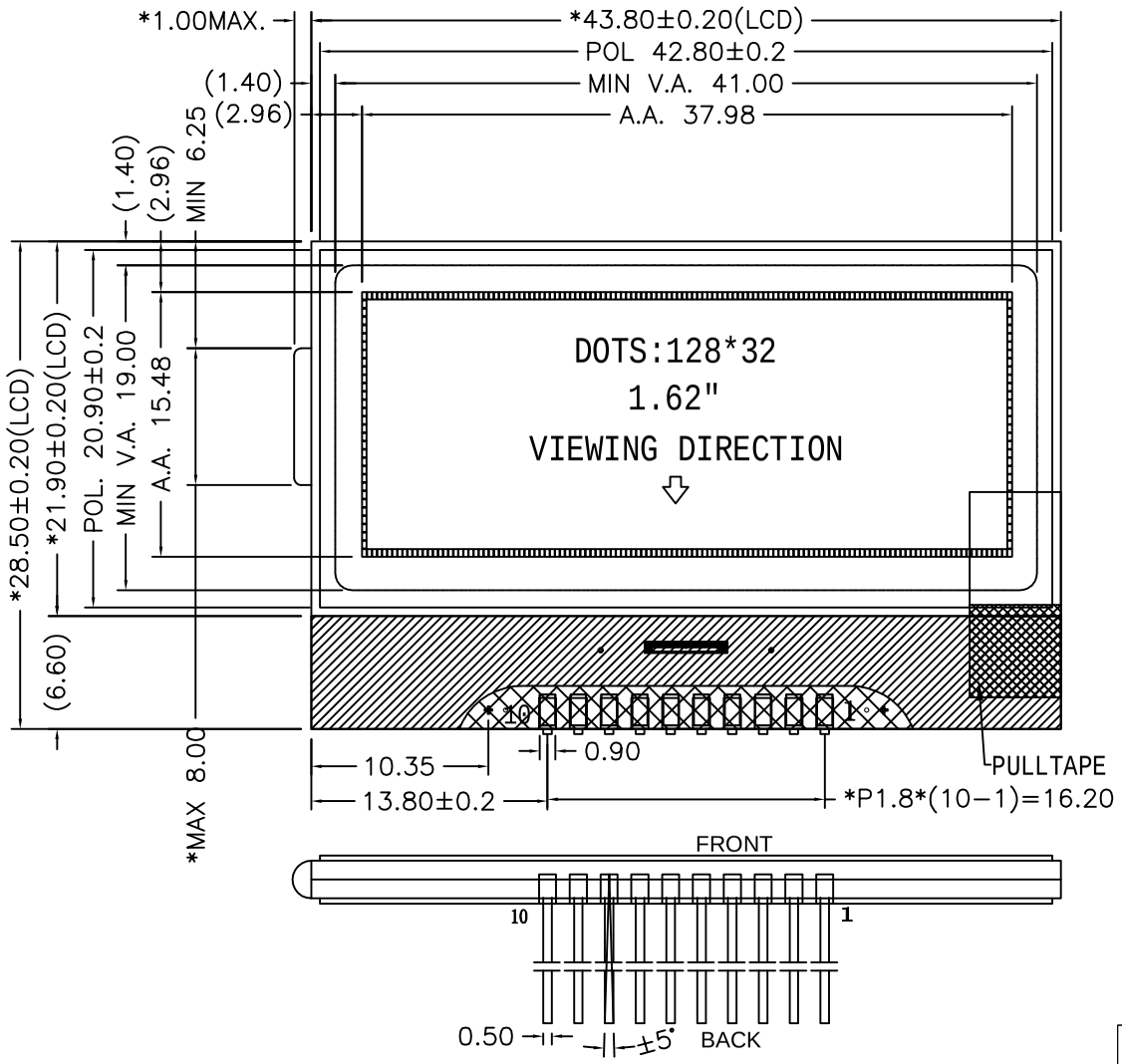


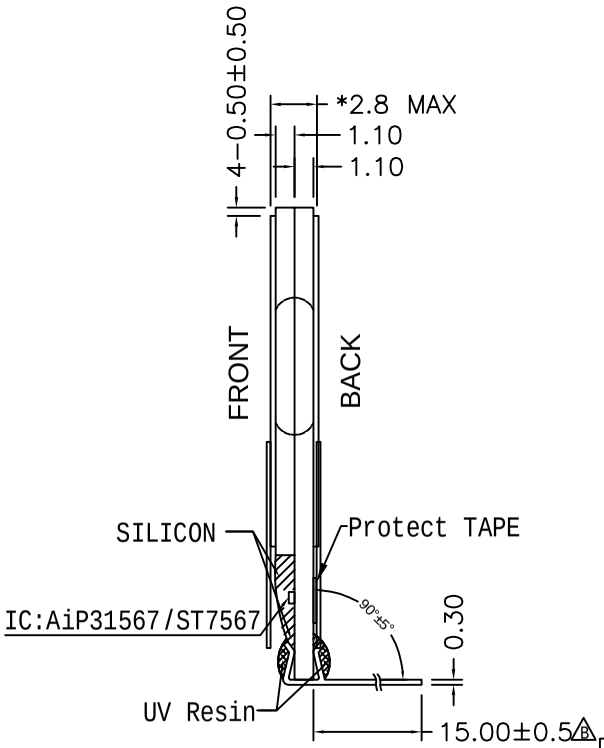


| PIN | SYMBO |
|---|---|
| 1 | CSB |
| 2 | RSTB |
| 3 | A0 |
| 4 | SCL |
| 5 | SDA |
| 6 | VDD |
| 7 | VSS |
| 8 | V0 |
| 9 | XV0 |
| 10 | VG |

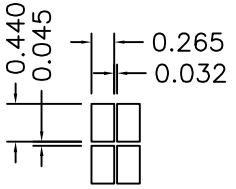


DOT DETALL 5:1

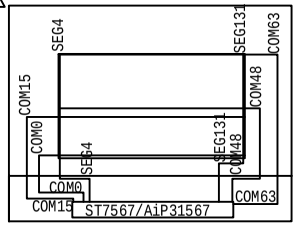


LCD LAYOUT

| | | | |
|---|---|---|---|
| DISPLAY TYPE | DFSTN | OPERATING VOLTAGE | VDD:3.3V,VLCD=5.0V |
| DRIVER IC | IC:AiP31567/ST7567 | DRIVER MODE | 1/33Duty,1/6Bias |
| VIEWING DIRECTION | 12:00 | POLARIZE TYPE | NEGATIVE,TRANSMISSIVE |
| OPERATING TEMP | -0° C~50° C | Backlight Color and Current | -- |
| STORAGE TEMP | -10° C~60° C | UNSPECIFIED TOLERANCE | ±0.20mm |
| CONNECTION METHOD | COG+PIN | Environmental Protection Requirements | RoHS |

华芯科技 HUAXIN TECHNOLOGY

华芯科技(恩施)有限公司

ONLYNEEDFACE

广东欧迪斐斯智能科技有限公司