BSUN

REV.	Q'TY	ECN. NO.	REASON&CONTENTS	SIGN	DATE
A	1		Change packing mode.	Log.Han	2010-06-02
A	1		To increase the buckle to prevent the 2# terminal from exiting.	PJ	2016-06-17

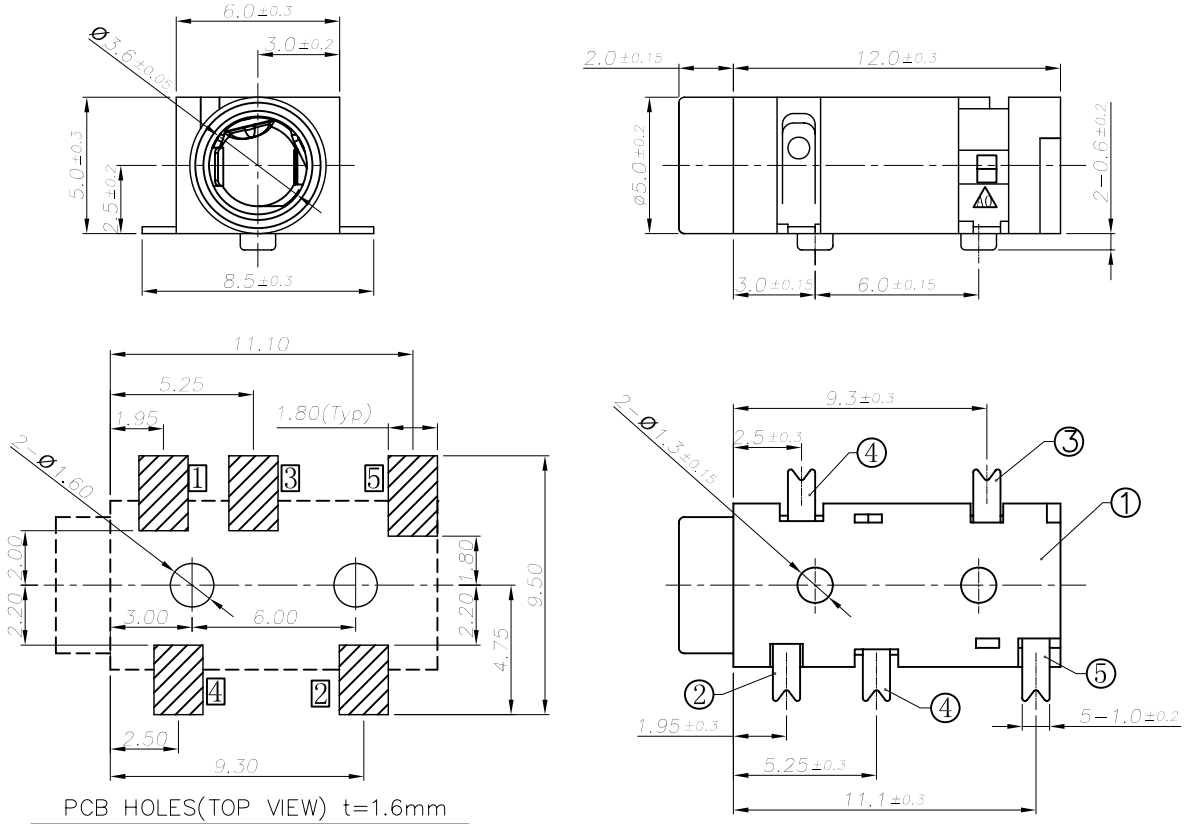

PCB HOLES(TOP VIEW) t=1.6mm

NOTE: GENERAL TOLERANCE: ±0.05mm

Ordering information:

PJ3027E-□ 9T □ □ □ 00 1

(1) (2) (3) (4) (5) (6) (7)

(1):Series No

(2):Schematic option:J M B D

(3):Material of housing:9T=PA9T

(4):Housing color:

Zero 0A=Black 2L=Pink(701C/0405)

5G=Lime(577C/0406) 6A=Blue(284C/0432)

(5):Terminal plating:

S=Silver(Ag) G=Gold(Au)

(6):Special option:

00=No special option

(7):Packing mode:

1:Tape reel packing

Matching Plug

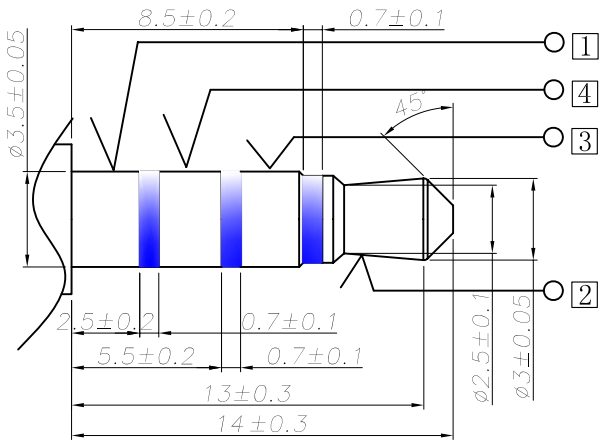

NO.	DESCRIPTION	Q'TY	MATERIAL	REMARK
⑤	Shunt terminal 5	1	Copper alloy	See"Ordering info."
④	Ring spring 3 4	2	Copper alloy	
③	Tip spring 2	1	Copper alloy	
②	Earth spring 1	1	Copper alloy	
①	Housing	1	High temp. thermoplastic	

Specification:

1. Rating : DC 30V 0.5A;
2. Contact resistance: ≤30mΩ;
   After test:≤50mΩ
3. Insulation resistance: ≥100MΩ(500VDC);
   After test:≥50MΩ
4. Withstand voltage: 500VAC ;
5. Insertion and extraction force: 3N～30N;
6. life test: 5000cycles min;
7. Operation temperature range: -20℃～70℃;
8. Preservation temperature range: -40℃～85℃;

Model No.	PJ3027E-J	PJ3027E-M
Schematic	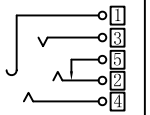	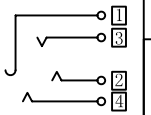
Model No.	PJ3027E-B	PJ3027E-D
Schematic	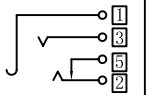	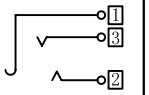

THIS DOCUMENT IS THE SOLE PROPERTY OF Bsun ELECTRONICS CO., LTD. AND SHOULD NOT BE USED IN WHOLE OR INPART WITHOUT PRIOR WRITTEN PERMISSION.

UNIT:MM

TOLERANCE	
DIMENSIONS	ANGLES
.X ±0.50	X ±5°
.XX ±0.30	.X ±3°
.XXX±0.15	.XX ±2°

TYPE: □3.5 PHONE JACK

MODEL NO: PJ3027E-_9T_ _ _001

DRAWING TYPE: CUSTOMER DRAWING

DRAWING No: BSCR-0000-XXXX

SCALE: N/A | VER.: A0 | PAGE: 1/1

DESIGNER BY:

CHECK BY:

APPROVED BY:

BSUN ELECTRONICS CO.,LTD

BSUN