ABIDE BY ROHS

Burnt orange shaft

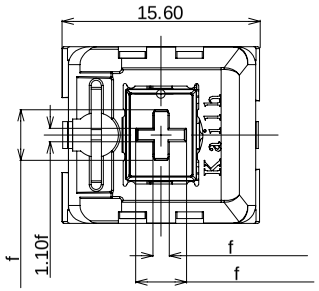

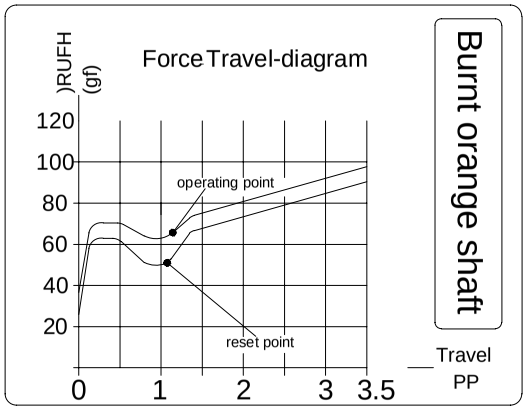

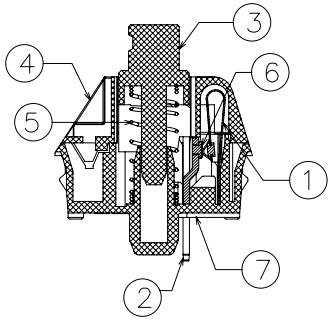

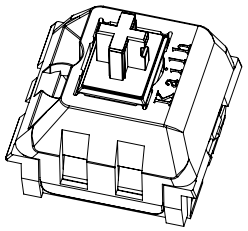

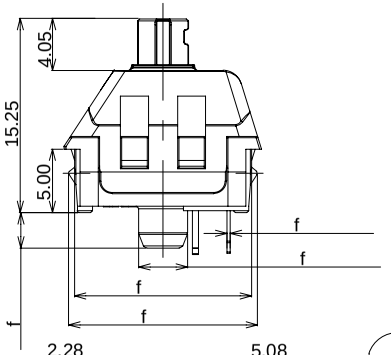

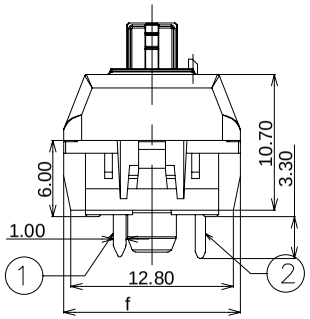

SWITCH FUNCTION

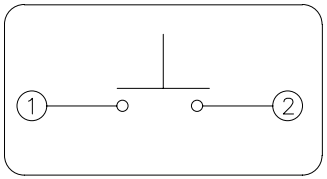

Specification :

1.Rating :12V AC/DC max. 2V DC min.

P$ $& '& PD[±$ '& PLQ

&RQWDFW 5HVLVWDQFH P¥ 0D[

,QVXODWLRQ 5HVLVWDQFH 0¥ 0LQ (DC500V)

4.Withstand Voltage :AC100V(50-60Hz) for 1 minute

%RXQFH 7LPH PVHF DW LQ VHF actuation speed)

2SHUDWLRQ)RUFH f JI

3UH WUDYHO f PP

7RWDO WUDYHO f PP

9.Operating Life :50,000,000 Cycles(min).

eI is allowed to have difference before and after life test

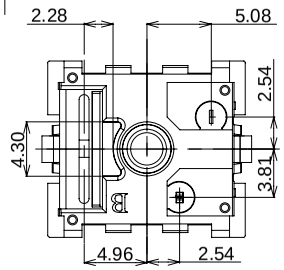

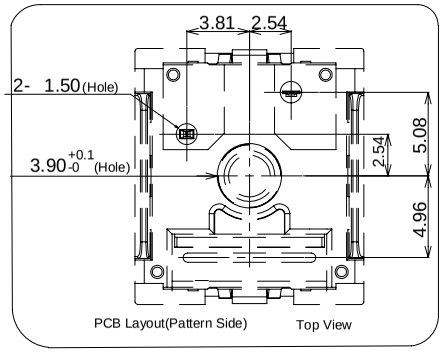

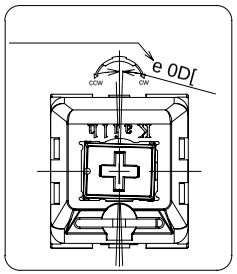

ITEM	PART NAME	TER'NO.	QTY.	MATERIAL	FINISHING	REMARK
⑦	Base	——	1	PA66	White	——
⑥	contact	——	2	Composite gold	——	——
⑤	Spring	——	1	Stainless Steel	——	——
④	Cover	——	1	PC	——	——
③	Keystroke	——	1	POM	Burnt orange	RAL 2012
②	static plate	——	1	Brass	Plating NI	——
①	movable plate	——	1	Copper Alloy	——	——

APPROVALS		DATE	DONGGUAN CITY KAIHUA ELECTRONICS CO.,LTD
DRAWN	YI JIN PING	2017.06.05	
CHECKED	Mo Jiangjiang	2024.12.14	TITLE: PG1511 Keystroke Switch(Burnt orange shaft)
APPROVALS	Chen Chao	2024.12.14	PART NO. CPG151101D218

TOLERANCES ARE			ANGLE	UNIT: mm	SCALE: 1:1	PROJ:
	30<L	±0.30	±2'	DRAWING NO. KHA-PG1511-178EN		SHEET 1 OF 1
	10<L≦30	±0.20				
	5<L≦10	±0.15				
	L≦5	±0.10				

ECN NO.	REV.	DATE.	DESCRIPTION.	CHANGE.	CHECK.	APPRO.
——	A	——	NEW	——	——	——