IIU

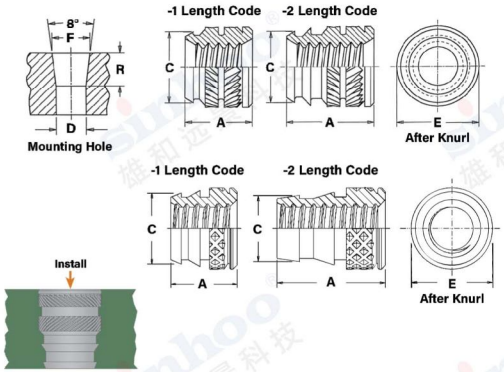

编码规则 PART NUMBER DESIGNATION

IIU	25	1	C	C
Type 类型	Thread Code 螺纹代码 M2.5x0.45	Length Code 长度代码 1(3.43mm)	Materials Code 材料代码 C:Brass A:Aluminum S:Sintered Steel	Finish Code 表面处理代码 C:Clean N:Nickel

All dimensions are in millimeters.

	Type	Thread Size x Pitch	Thread Code	Length Code	A ±0.13	E ±0.13	C ±0.13	Hole Size In Material			
								Min. Hole Depth	D ±0.05	F ±0.05	R Ref. Taper Length
METRIC 公制尺寸	IIU	M2.5x0.45	25	1	3.43	4.37	3.99	4.44	3.89	4.04	1.07
				2	5.56		3.79	6.58	3.58		3.29
	IIU	M3x0.5	30	1	3.43	4.37	3.99	4.44	3.89	4.04	1.07
				2	5.56		3.79	6.58	3.58		3.29
	IIU-B	M3x0.5	30	1	3.81	5.56	5.16	4.83	5.05	5.23	1.29
				2	6.35		4.83	7.42	4.70		3.79
	IIU	M3.5x0.6	35	1	3.81	5.56	5.16	4.83	5.05	5.23	1.29
				2	6.35		4.83	7.42	4.70		3.79
	IIU	M4x0.7	40	1	4.70	6.35	5.84	5.72	5.74	5.94	1.43
				2	7.92		5.41	8.94	5.28		4.72
	IIU	M5x0.8	50	1	5.72	7.54	6.91	6.74	6.78	7.03	1.79
				2	9.53		6.38	10.55	6.25		5.58
	IIU-B	M5x0.8	50	1	6.71	8.33	7.83	7.72	7.70	8.00	2.15
				2	11.10		7.16	12.12	7.06		6.72
	IIU	M6x1	60	1	7.62	9.52	8.99	8.64	8.86	9.22	2.57
				2	12.70		8.43	13.72	8.15		7.65
	IIU	M8x1.25	80	1	8.51	11.91	11.15	9.53	10.95	11.38	3.07
				2	14.27		10.31	15.29	10.19		8.51

All dimensions are in inches.

	Type	Thread Size x Pitch	Thread Code	Length Code	A ±.005	E ±.005	C ±.005	Hole Size In Material			
								Min. Hole Depth	D ±.002	F ±.002	R Ref. Taper Length
UNFIED 英制尺寸	IIU	.060-80 (#0-80)	080	1	.115	.141	.123	.155	.118	.123	.036
				2	.188		.115	.228	.107		.114
	IIU	.086-56 (#2-56)	256	1	.115	.141	.123	.155	.118	.123	.036
				2	.188		.115	.228	.107		.114
	IIU	.112-40 (#4-40)	440	1	.135	.172	.157	.175	.153	.159	.043
				2	.219		.149	.259	.141		.129
	IIU	.138-32 (#6-32)	632	1	.150	.219	.203	.190	.199	.206	.050
				2	.250		.190	.290	.185		.150
	IIU	.164-32 (#8-32)	832	1	.185	.250	.230	.225	.226	.234	.057
				2	.312		.213	.352	.208		.186
	IIU	.190-24 (#10-24)	024	1	.225	.297	.272	.265	.267	.277	.072
				2	.375		.251	.415	.246		.222
	IIU	.190-32 (#10-32)	032	1	.225	.297	.272	.265	.267	.277	.072
				2	.375		.251	.415	.246		.222
	IIU	.250-20 (1/4-20)	0420	1	.300	.375	.354	.340	.349	.363	.100
				2	.500		.332	.540	.321		.300
	IIU	.250-28 (1/4-28)	0428	1	.300	.375	.354	.340	.349	.363	.100
				2	.500		.332	.540	.321		.300
	IIU	.313-18 (5/16-18)	0518	1	.335	.469	.439	.375	.431	.448	.122
				2	.562		.406	.602	.401		.336
	IIU	.375-16 (3/8-16)	0616	1	.375	.563	.532	.415	.523	.540	.122
				2	.625		.493	.665	.488		.372

IIUT

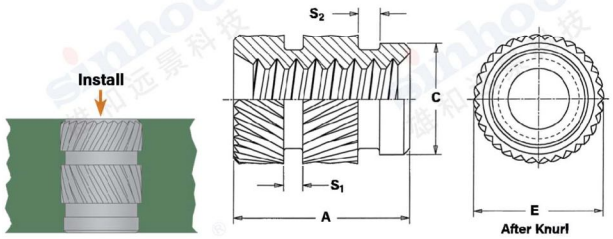

编码规则 PART NUMBER DESIGNATION

IIUT	25	C	C
Type 类型	Thread Code 螺纹代码 M2.5x0.45	Materials Code 材料代码 C:Brass A:Aluminum S:Sintered Steel	Finish Code 表面处理代码 C:Clean N:Nickel

All dimensions are in millimeters.

	Type	Thread Size x Pitch	Thread Code	A ±0.13	E ±0.23	C ±0.13	S1 Nom.	S2 Nom.	Hole Size In Material	
									Min. Hole Depth	Hole Dia. +0.08
METRIC 公制尺寸	IIUT	M2x0.4	20	4.00	3.73	3.07	0.79	0.79	4.76	3.23
	IIUT	M2.5x0.45	25	5.74	4.55	3.86	0.79	0.79	6.50	4.01
	IIUT	M3x0.5	30	5.74	4.55	3.86	0.79	0.79	6.50	4.01
	IIUT	M3.5x0.6	35	7.14	5.33	4.65	0.79	0.79	7.90	4.81
	IIUT	M4x0.7	40	8.15	6.17	5.51	0.79	1.02	8.91	5.67
	IIUT	M5x0.8	50	9.52	6.93	6.27	1.17	1.17	10.28	6.43
	IIUT	M6x1	60	12.70	8.69	7.87	1.17	1.58	13.46	8.03

All dimensions are in inches.

	Type	Thread Size	Thread Code	A ±.005	E ±.009	C ±.005	S1 Nom.	S2 Nom.	Hole Size In Material	
									Min. Hole Depth	Hole Dia. +0.03
UNFIED 英制尺寸	IIUT	.086-56 (#2-56)	256	.157	.147	.121	.021	.021	.187	.127
	IIUT	.112-40 (#4-40)	440	.226	.179	.152	.031	.031	.256	.158
	IIUT	.138-32 (#6-32)	632	.281	.210	.183	0.31	.031	.311	.189
	IIUT	.164-32 (#8-32)	832	.321	.243	.217	.031	.040	.351	.223
	IIUT	.190-24 (#10-24)	024	.375	.273	.247	.046	.046	.405	.253
	IIUT	.190-32 (#10-32)	032	.375	.273	.247	.046	.046	.405	.253
	IIUT	.250-20 (1/4-20)	0420	.500	.342	.310	.046	.062	.530	.316
	IIUT	.250-28 (1/4-28)	0428	.500	.342	.310	.046	.062	.530	.316
	IIUT	.375-16 (3/8-16)	0616	.500	.509	.462	.046	.062	.530	.468