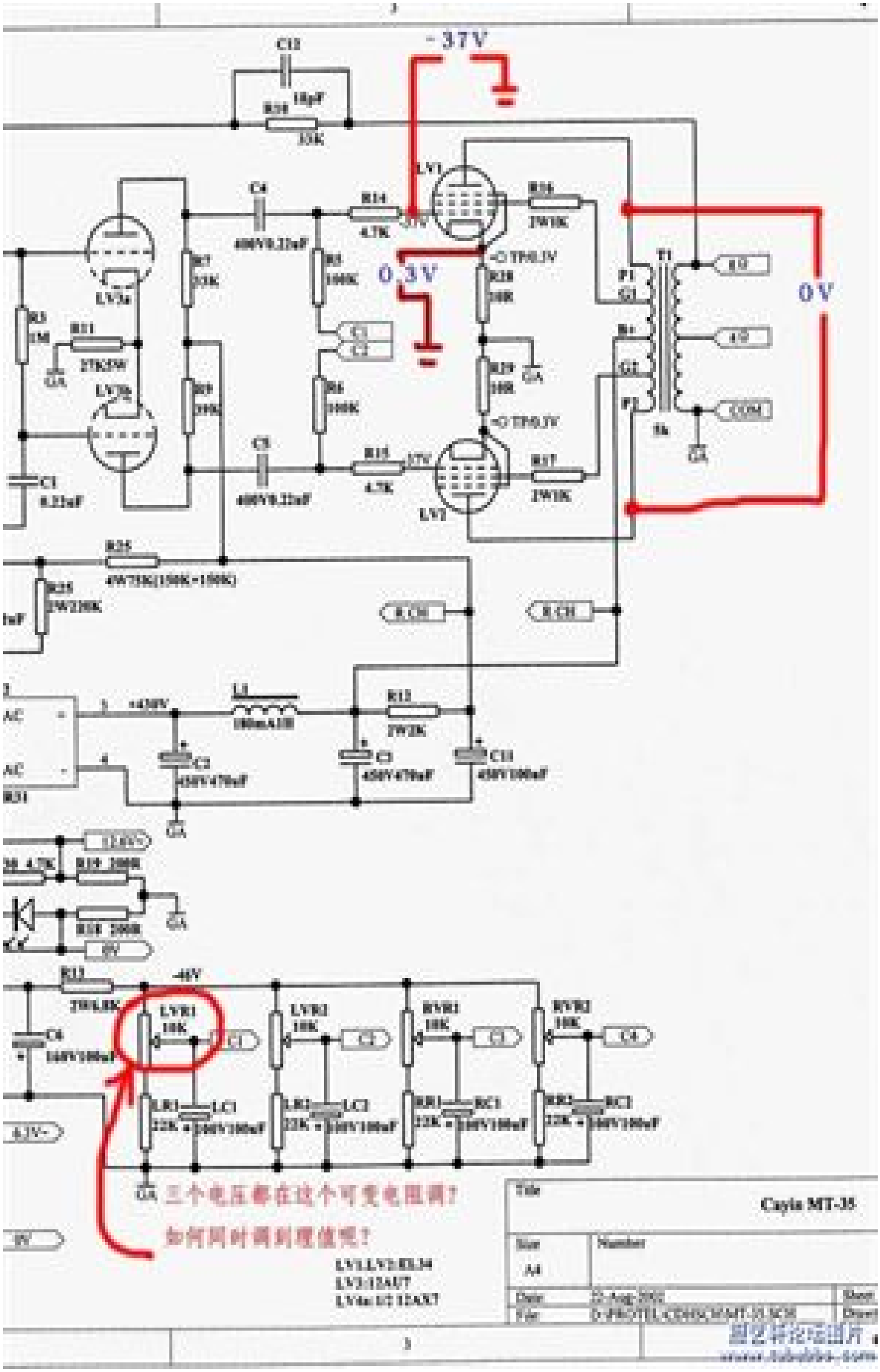
-37V
0.3V
0V
C12
18pF
R24
33K
LV1
R14
4.7K
R16
2W1K
C4
400V0.22uF
R5
100K
R6
100K
R28
10K
R29
10K
LV3a
LV3b
R7
33K
R9
390K
R3
1M
R11
27K5W
C1
0.22uF
C3
400V0.22uF
R15
4.7K
R17
2W1K
LV2
T1
F1
G1
B+
G2
F2
5k
R25
4W75K(150K+100K)
R26
2W220K
R.CH
L.CH
L1
180mA1H
R13
2W2K
C2
450V470uF
C3
450V470uF
C11
450V100uF
R18 4.7K
R19 200K
R18 200K
R12
79K8K
-46V
LVR1
10K
LVR2
10K
RVR1
10K
RVR2
10K
C4
160V100uF
LR1
22K
LC1
LR2
22K
LC2
RR1
22K
RC1
RR2
22K
RC2
三个电压都在这个可变电阻调?
如何同时调到理想呢?
LV1,LV2:EL34
LV3:12AU7
LV4a/LV:12AX7
Title
Cayin MT-35
Size
A4
Number
Date
Sheet
Drawn
www.tubebbs.com