深圳易凯达科技有限公司 RoHS

SWITCH TYPE	Micro Switches	MODEL NO.	DV16-B48-NN1-250-019

1. Functional spec.

1.1 Rated Voltage	125/250VAC	1.6 Free Position	21.45±1.50mm
1.2 Rated Current	16A	1.7 Operating Position	19.50±1.50mm
1.3 Contact Resistance	≤100mΩ(Initial value)	1.8 Position Travel	
1.4 Operating Force	250gf	1.9 Bounce Time	
1.5 Return Force		1.10	

2. Reliable Rating

2.1 Mechanical Life	1,000,000 CYCLES	2.5 Soldering Temper.	Hand Soldering 350° 3-5S
2.2 Electrical Life	50,000 CYCLES	2.6 Ambient Temper. Used	-40℃ - +125℃
2.3 Insulation Resistance	≥100MΩ DC500V (Initial value)	2.7 Ambient Humidity Used	<85%RH
2.4 Withstand Voltage	AC1500V 1 minute (Initial value)	2.8	

3. Dimension Drawing

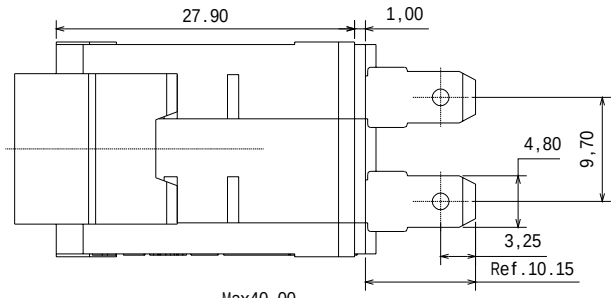

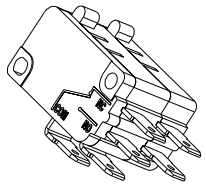

Scale 1:2

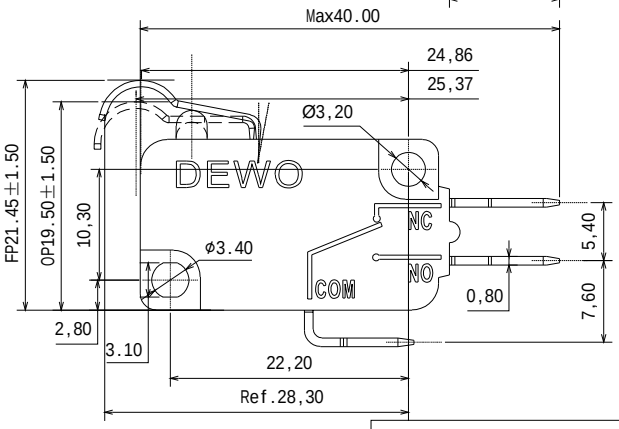

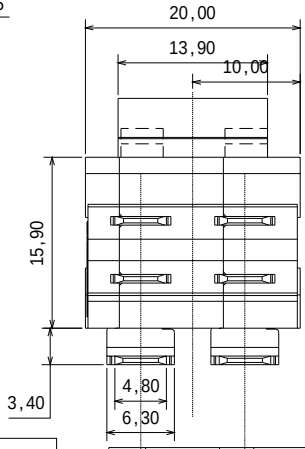

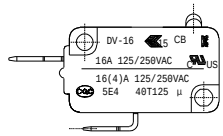

Scale 1:2

Accreditation

SCHEMATIC

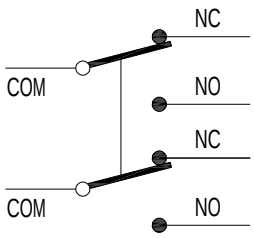

No	PartName	Dosage	Material	Notes
1	Cover	1	PBT,30%GF	
2	Base	1	PBT,30%GF	
3	Button	2	LCP,OP 17.50	
4	D-Base	1	PBT,30%GF	
5	COM Terminal	2	C2680R-1/2H	
6	NC Terminal	2	C2680R-1/2H	
7	NO Terminal	2	C2680R-1/2H	
8	SpringStrip	2	C1720R,200gf	
9	Transfer	2	C2680R-1/2H	
10	Transmission	2	C2680R-1/2H	
11	Press.H	1	Press Layer1 SUS301-1/2H	
12	T.Contact	4	AgNi Alloy	
13	C.Contact	2	AgNi Alloy	

				Tolerance	±0.2	Unit	mm
				Doc.NO			
				Drawing Model	Specification		
				DEWO REV	A/0	Page 1 Of 1	
				Approved			
A	First edition	2020.04.20	Mao Yong	Reviewed			
Ver.	Revise content	Date	Revise	Prepared			