CANAL COMPONENTS INC.

Category

SWITCH
- MICRO/DETECTOR SW
- ROCKER SW
- PUSH SW
- TOGGLE SW
- ANTI-VANDAL SW
- CAPACITANCE SW
- SLIDE SW
- PRESSURE SW
- ROTARY SW
- DIP SW
- TACT SW
- LIGHTED TACT SW
- KEYLOCK SW
- SAFETY & CONTROL SW
- VEHICLE SW

SOCKET
WIRE HARNESS
BREAKER
FUSE HOLDER
FUSE
ENCODER
INDICATOR
CONNECTOR
WATERPROOF CONNECTOR
WATERPROOF PARTS
NEW PRODUCT

Products Search

Search

OUR PRODUCT

SWITCH / ROCKER SW

R-H Series
Standard 11x30mm rocker switches, up to 30A 125/250VAC, 128 inrush

SINGLE POLE ROCKER SWITCHES UP TO 30A 125/250VAC
SPST, SPDT, on-off, on-on, on-off-on or momentary functions
illuminated or non-lighted, round len window available
.250 or .187 quick connector terminals

ZOOM IN

PDF Download Get Information

Print this page

Feature

Two positions:

- 20A 125VAC (cURus)
- 16A 125/250VAC(cURus)
- 16(4)A 250V~ T125/55 (VDE & ENEC10, CQC)
- *Optional:* 3/4HP 120/250VAC (cURus)
- *Optional:* 10(2)A 250~T125/55 5E4 (VDE & ENEC10, CQC)
- *Optional:* 20(8)A 250V~ T125/55 (VDE & ENEC10, CQC)
- *Optional:* 25(8)A 250VAC T125/55 (CQC)
- *Optional:* 8[128]A 250V T55 1E4 (cURus, ENEC15)
- *Optional:* 30(8)A 125/250VAC T125/55 1E4 (cURus, ENEC15)
- *Optional:* 30A 48VDC T125/55 1E4 (cURus, ENEC15)
- *Optional:* 20A 125VAC /16A 250VAC, 3/4HP 125/250VAC T105 (UL/CUL)

Three positions:

- 16A 125/250VAC(cURus)
- 16(4)A 250V~ T85/55 (VDE & ENEC10, CQC)

- Initial contact resistance : 20m ohm max.
- Insulation resistance : 100M ohm min, at 500VDC
- Dielectric strength : 1,000 VAC(UL), 1500VAC(VDE)for 1 minute
- Electrical life: 6000(UL); 10000(VDE) cycles
- Base : Nylon 66, UL rated : 94V-2 min
- Actuator : Nylon 66 /PC, UL rated 94V-2 min
- Spring : Piano wire
- Contacts : Silver alloy
- Terminals : Silver plated copper
- Lamp : Neon for AC
- Round LED effect lighting available
- SPST, SPDT
- ON-OFF; ON-ON, ON-OFF-ON or momentary functions

Specification

How to Order

R — H 1 0 C 5 W —

POLE	
H	SINGLE POLE

FUNCTION	
1	ON-OFF
2	ON-ON
3	ON-OFF-ON
4	(ON)-OFF
5	(ON)-ON
6	(ON)-OFF-(ON)
7	(ON)-OFF-ON

TERMINAL TYPE	
0	QUICK CONNECT
1	SOLDER
2	PC TERMINAL
3	SCREW

ACTUATOR TYPE	
C	CURVE
F	FLAT

MARKING TYPE			
1		4	
2		5	
3		6	

*Ask us for other marks!

MARKING COLOR	
N	NONE
B	BLACK
W	WHITE
R	RED

L B R B — X

ILLUMINATED TYPE	
N	NONE
L	100~125VAC
G	200~250VAC
C	100~125VAC WITH CIRCLE LENS
D	200~250VAC WITH CIRCLE LENS
1	LED 5VDC
2	LED 12VDC
3	LED 24VDC
4	LED 28VDC
5	LED 48VDC
* Ask us for other illuminated type	

BASE COLOR	
A	GRAY
B	BLACK
W	WHITE

ACTUATOR COLOR	
Non-illuminated	
A	GRAY
B	BLACK
W	WHITE
R	RED
Illuminated	
R	RED
O	ORANGE
G	GREEN

RATING & TEMPERATURE	
A	16(4)A 125/250VAC T55
B	16(8)A 125/250VAC T55
C	30(8)A 125/250VAC T55
D	16RA (6~30VDC) T55
G	30A 48VDC T55
F	8[128] 250VAC T55 (no lamp)
1	16(4)A 125/250VAC T125/55
2	16(8)A 125/250VAC T125/55
3	16(4)A 125/250VAC T85/55
4	16RA (6~30VDC) T125/55
5	30(8)A 125/250VAC T125/55
6	30A 48VDC T125/55
9	1/3HP, 3/4HP 125/250VAC 6E3

SUFFIXES
Blank or Letter / Number
* Consult us for detailed code

Quoted from Wekipedia:

~Inrush current, input surge current or switch-on surge is the maximum, instantaneous input current drawn by an electrical device when first turned on. For example, incandescent light bulbs have high inrush currents until their filaments warm up and their resistance increases. Alternating current electric motors and transformers may draw several times..... ~

Choosing a switch that can have a good capacity for your device is thus very important for your device's safety. Our RH series can offer an option up to 8A'L' or 128A inrush that can be the appropriate switch to ensure your device's life and stability.

Snap-in mounting

x=panel thickness

X	Dim.Y	Dim.Z
0.75 to 1.25 mm	30.0+0/−0.1	11.0+0.1/−0
1.25 to 2 mm	30.2+0/−0.1	11.0+0.1/−0
2 to 3 mm	30.5+0/−0.1	11.0+0.1/−0

Item

R-H10C2N-CBBB

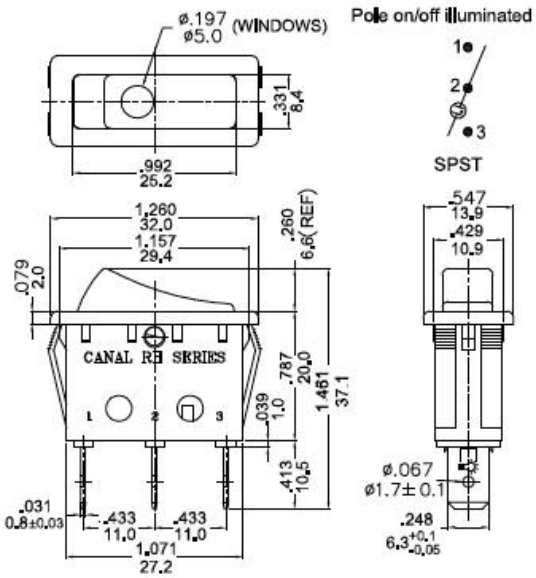

R-H10C5W-LWRA

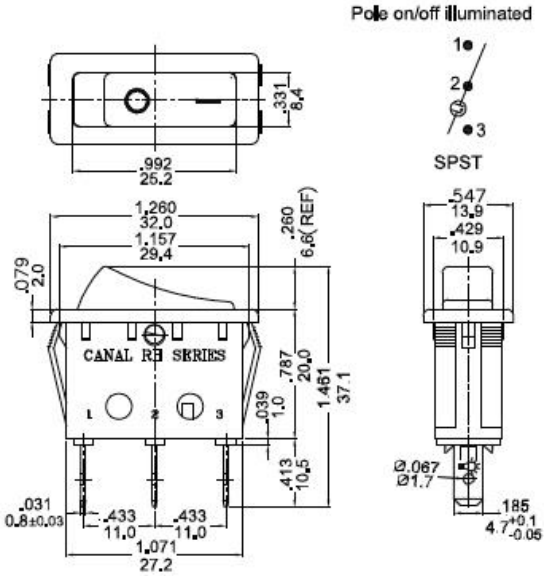

R-H10C5W-NBRB

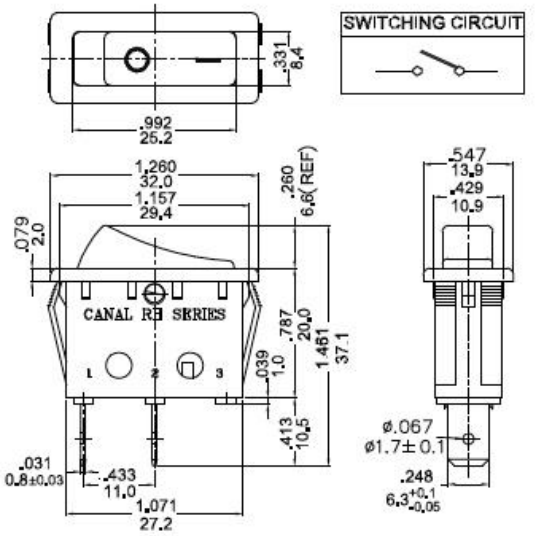

R-H30C6W-NBBA

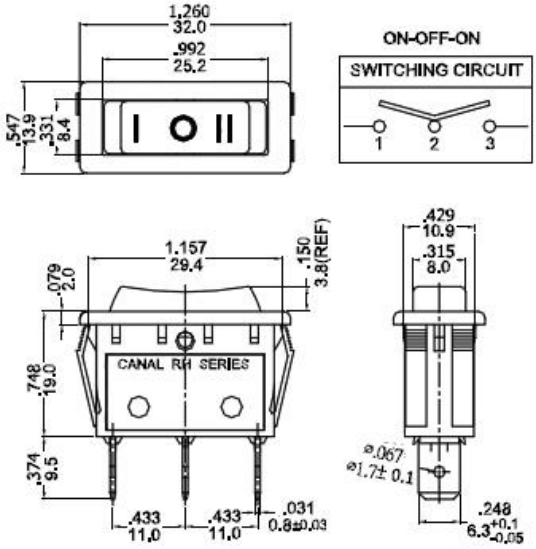

Other extended types

BACK

5F., No.10, Lane 218, Sec. 2, Zhongxing Rd., Xindian Dist., New Taipei City 23146, R. O. C.
Tel: +886-2-29161263 Fax: +886-2-29117574 canal@c-components.com.tw

©2009 Canal Components Inc. All Rights Reserved