# SOAR

CAD FILE:

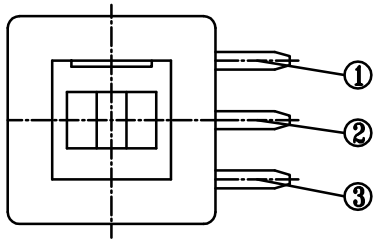


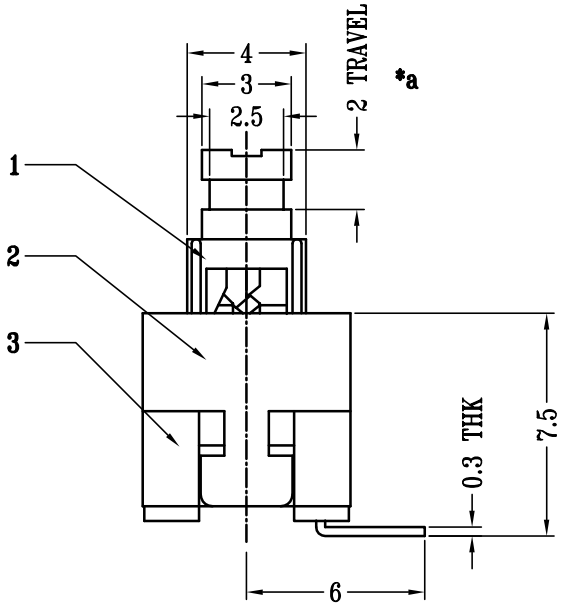


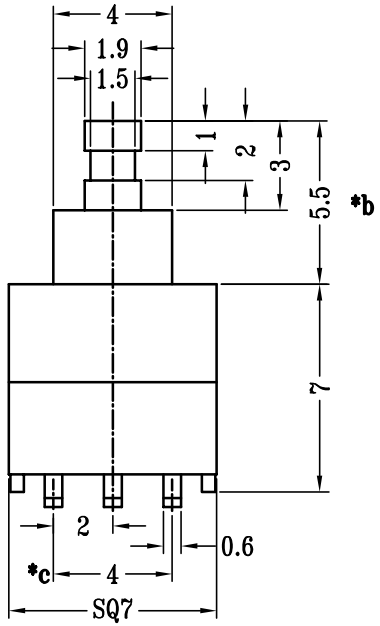


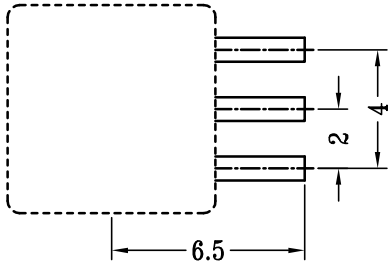


P.C.B LAYOUT

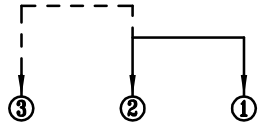


SCHEMATIC (NON-SHORTING)

注："*"表示关键尺寸（3个）.

| NO. | PARTS | MATERIALS | Q'TY | FINISH |
|---|---|---|---|---|
| 8 | | | | |
| 7 | | | | |
| 6 | | | | |
| 5 | SPRING | SUS | 1 | NATURAL |
| 4 | CONTACT CLIP | PBS C5210R-EH | 1 | Ag CLAD |
| 3 | CASE | PBT/BRASS STRIP | 1 | BLACK/Ag PLATED OVER Ni PLATED |
| 2 | COVER | POM | 1 | WHITE |
| 1 | KNOB | POM | 1 | BLACK |

TOLERANCE UNLESS SPECIFIED
WITHIN 1.5mm : ±0.1mm
OVER 1.5mm : ±0.2mm

| ISSUE | DATE | DESCRIPTIONS OF REVISION | APPD. |
|---|---|---|---|
| | | | |

TITLE : VERTICAL SLIDE SWITCH

UNIT : mm

DRWG NO.: JK-DR-PB12E67B-00

MODEL: MC-2C-A001

SCALE: 4:1

DWN.

CHK'D

APPD.

DONGGUAN SOAR ELECTRONIC CO LTD.