BSUN

REV. LTR.	DESCRIPTION	SIGN	DATE

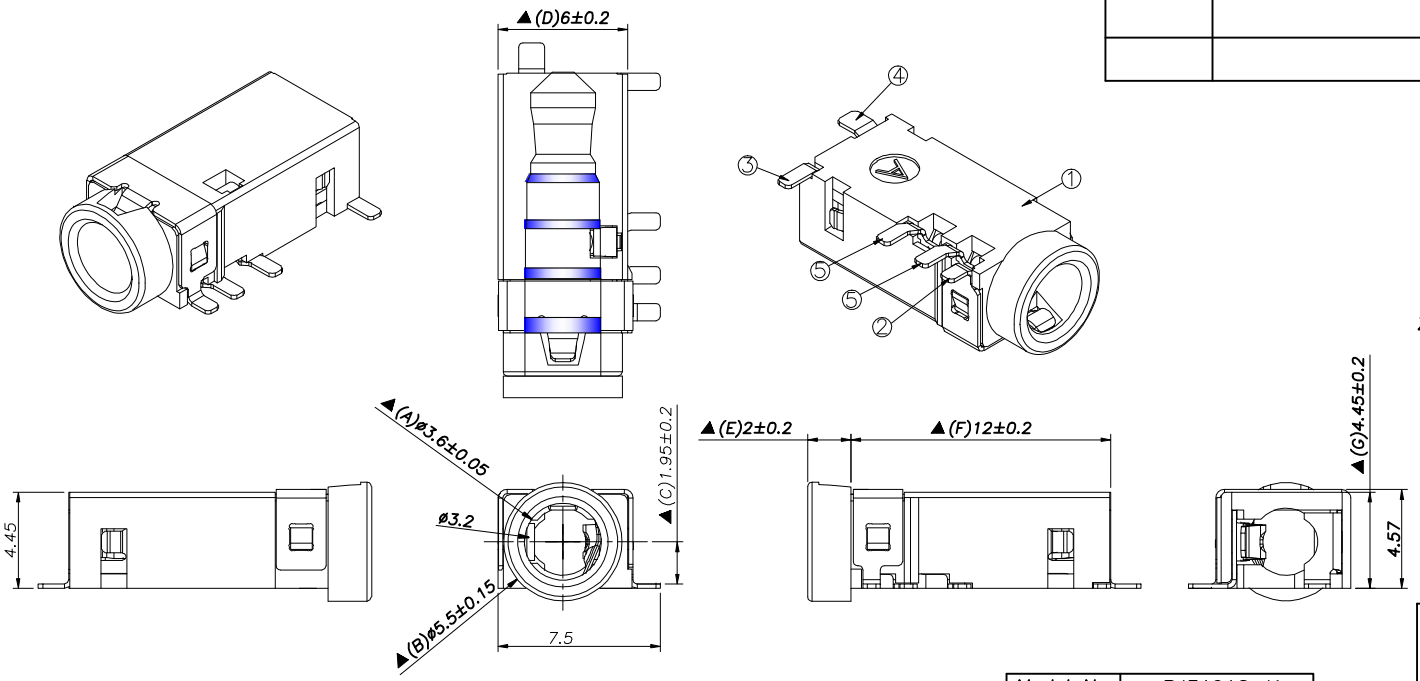

Ordering information:

PJ31910 - K10 0A G 0H 1

(1) (2) (3) (4) (5) (6) (7)

(1):Series No.
(2):Schematic option: K
(3):Material of housing:
10=PA10T(Standard)
(4):Housing color:
0A=Black
Zero **(5):Terminal plating**
G=Gold(Au)(Standard)
(6):Special option:
0H=Halogen Free material
(7):Packing mode:
1=Tape reel packing

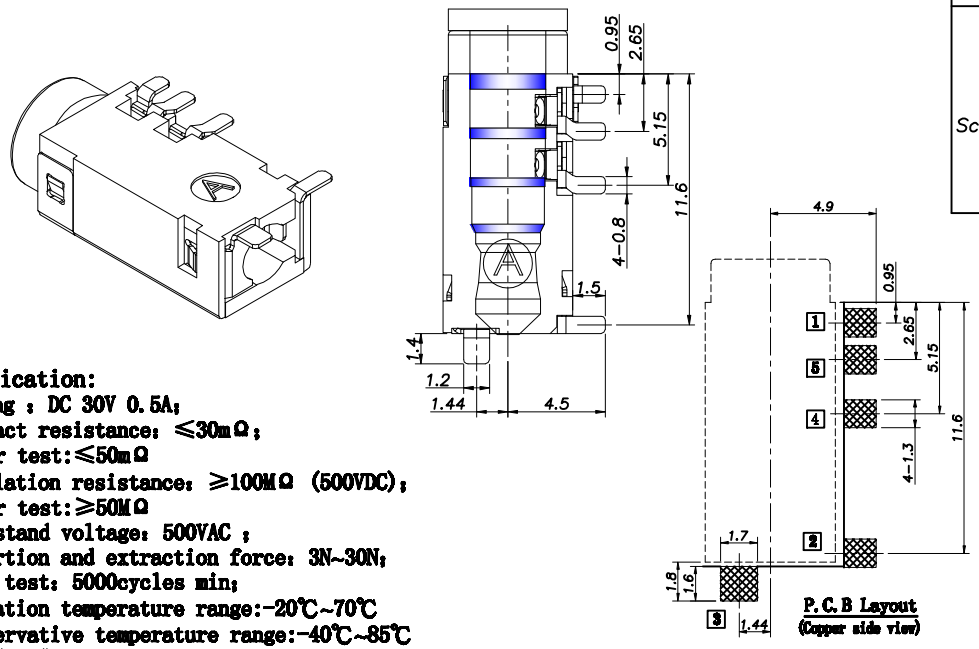

Model No.	PJ31910-K
Schematic	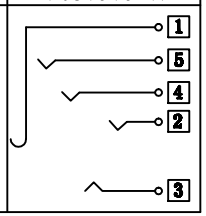

□:Terminal No.

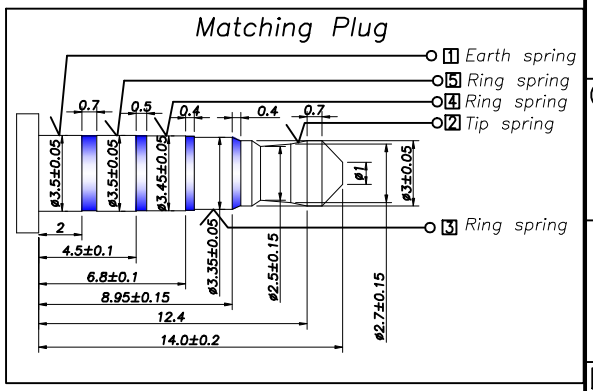

Specification:

1. Rating : DC 30V 0.5A;
2. Contact resistance: ≤30mΩ;
   After test:≤50mΩ
3. Insulation resistance: ≥100MΩ (500VDC);
   After test:≥50MΩ
4. Withstand voltage: 500VAC ;
5. Insertion and extraction force: 3N~30N;
6. life test: 5000cycles min;
7. Operation temperature range:-20℃~70℃
8. Preservative temperature range:-40℃~85℃
9. Sign"▲ "is importance dimension

ITEM	DESCRIPTION	QTY	MATERIAL	PART NO.	REMARK
⑤	Ring spring 4 5	2	Phosphor bronze t=0.2	PJ31910-04	Gold flash
④	Ring spring 3	1	Phosphor bronze t=0.2	PJ31910-03	Gold flash
③	Tip spring 2	1	Phosphor bronze t=0.2	PJ31910-02	Gold flash
②	Earth spring 1	1	Phosphor bronze t=0.2	PJ31910-01	Gold flash
①	Housing	1	PA10T,UL-94V-0	PJ31910-S1	

UNIT: MM	TYPE:	MODEL NO:	PAPER NO: A4		PAGE 1 OF 1	
	ø3.5 PHONE JACK	PJ31910- K100AG0H1	TOLERANCE	ANGLES	SCALE	VER
			±0.25	±2°	FULL	01

DESIGNER BY:	WANGYAN 2010.12.24	BSUN ELECTRONICS CO.,LTD
CHECK BY:		
APPROVED BY:		

BSUN